SAILRITE

FABRICATOR

Sewing Machine

Needle Type:
135 x 17, 135 x 16

Set-Up • Use • Maintenance
Troubleshooting • Schematics

Welcome to Your Fabricator Sewing Machine!

The Fabricator is a production machine that can sew all day with its best-in-class power system.

Add in its slow speed power and control, which allows you to truly sew stitch-by-stitch, and you've got yourself a new trusty sidekick for all your canvas and upholstery projects.

This guidebook will give you in-depth knowledge of your machine including getting set-up, sewing, advanced maintenance and troubleshooting.

Table Of Contents

SEWING MACHINE SAFETY

Please observe the following when using your Sailrite sewing machine

- Do not operate in conditions where you or the machine are or may become wet.
- Operate the machine on a firm, level surface where there is adequate room for safe operation.
- Observe caution when placing your hands or other parts of your body or clothing near any moving parts including but not limited to the following: the walking foot, the needle, the drive belt, the balance wheel and any of its parts.
- Do not run the machine without its covers.
- Do not stop the movement of the balance wheel with your hands.
- Use caution in tilting the machine backwards in its table and in lowering it back into the table.
- Use proper lifting techniques when moving the machine.
- Do not drop the machine.
- Always use the proper voltage required for the motor and light.
- Wear protective eyewear when sewing.
- Wear shoes when operating the foot pedal.
- Provide supervision when allowing others to use the machine—particularly children and those who are unfamiliar with the machine's operation.
- Do not use around flammable materials.
- Use both hands to feed and guide the material while the belt and balance wheel are in motion.
- Maintain a safe distance from the belt and balance wheel when the machine is in motion.
- The operator's hand should not be near the wheel pinch point (where moving parts may cause harm to the user) except to raise and lower the needle, and only when the motor is disengaged.

WARNING: Some products may be fabricated from materials which may contain chemicals known to the state of California to cause cancer, birth defects or other reproductive harm.

SAILRITE FABRICATOR SET-UP

Our expert Sailrite technicians have checked and adjusted every component of this machine. It has been sewn off and all accessories have been prepared for easy installation. With this guidebook, you should be able to maintain and adjust your own machine. Please do not make substantial adjustments to machine settings unless in consultation with Sailrite.

Unpacking the Sailrite Fabricator

To remove the casting from the box, it is best to have help. While one person holds the box down on the floor, the other should reach under the arm of the machine and lift straight up. Set the machine on a solid surface or floor.

Tip: Place a newspaper or old towel down first to absorb any oil and protect the surface.

Inspecting the Machine

Before use, thoroughly inspect the machine. It will arrive threaded with a fabric sample under the presser feet. To remove the fabric, untie the thread from the top of the machine and lift the presser feet with the hand lever (**A**). Make sure the needle is up, out of the fabric and pull the sample and all thread free from the top of the machine. Cut the bobbin thread and let it lay loose. See page 41 for complete steps.

Power Stand Assembly

1. Find parts **A**, **B**, **C** and **D**. Stand both k-legs upright and bolt the back support bar (**E**) to the bottom hole at the back of the table legs (**Figure 2**).
2. Find parts **F**, **G** and **H**. Flip the legs upside-down and place the treadle mount bar (**I**) at the back of the forward most slots (**Figure 3**). Bolt the treadle mount bar to the bottom surface of each crossbar of the k-legs (**Figure 4**).

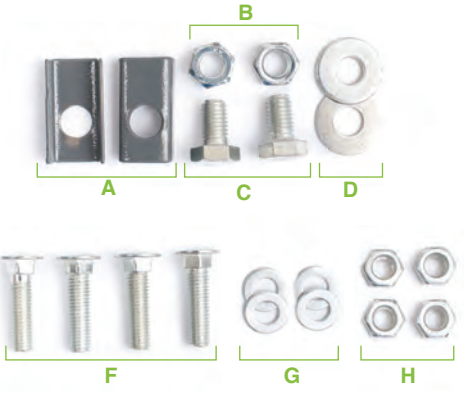

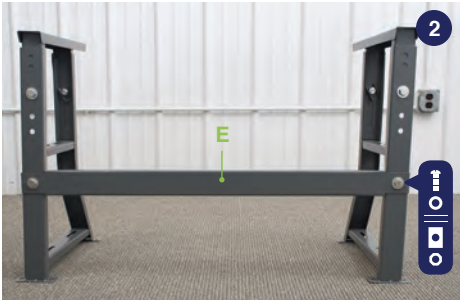

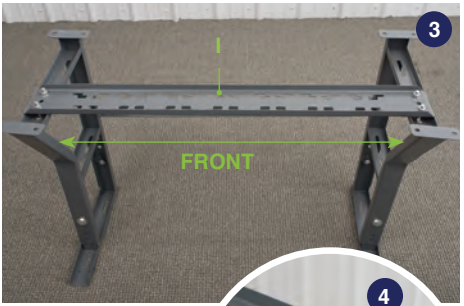

3. Place the top of the table on the floor with the laminate surface down. Place on a soft surface to avoid scratching the tabletop. Squarely line up the table legs as shown (**Figure 5**). Be sure that the legs are facing the correct direction. Reference the cutout shape in the tabletop to aid in placement.

4. Use a pencil to mark screw locations for attaching the K-leg frame to the tabletop (**Figure 6**). Use a 5/32" drill bit and drill about 1/2" into the tabletop. **Do not drill completely through.**

5. Bolt the frame to the bottom of the tabletop using the enclosed hex head lag screws (**J**), locking washer (**L**) and washer (**M**) to lock at each position (**Figure 7**).

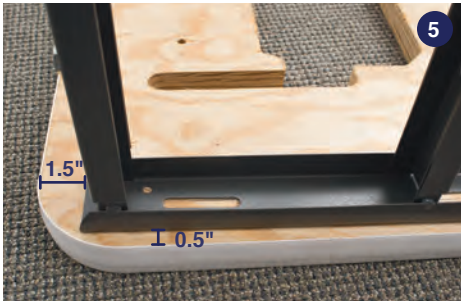

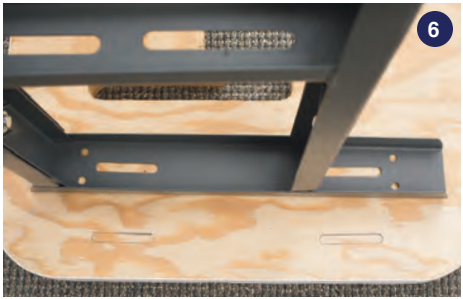

Installing the Drawer

The drawer mounts to the forward, left, underside of the table when the stand is upright. To install the drawer, locate the rough position (**Figure 8**) and put the drawer rails and the drawer in position. The drawer should pull open from the front of the table (**Figure 9**) and when pushed in, it will hit a stop. Secure the rails to the underside of the table with the included screws (**K**) on page 4 (**Figure 10**).

Tip: Do not over tighten the screws or they will prevent the drawer from sliding freely.

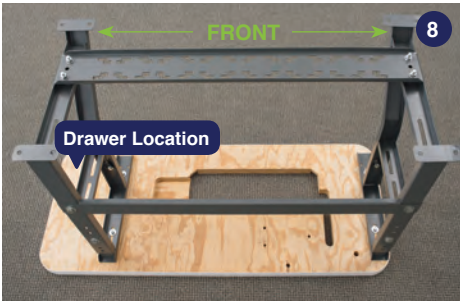

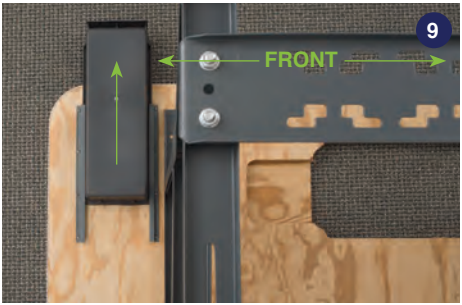

Installing Rubber Foot Pads

Stretch the K-Leg foot pads onto the rectangular metal feet of the table legs (**Figure 11**).

Flip the table upright.

If the height needs adjusted, move the bolts up or down in the leg slots and holes then lock in place (**Figure 12**). Be sure to adjust the height before placing the sewing machine casting in the tabletop.

Be sure all nuts and bolts are tight.

Installing the Treadle

The treadle is typically installed near the center of the treadle mount bar, but it can be set to the user's preference anywhere on the bar.

After determining placement and taking note of desired location of the treadle, flip the table onto its back side (**Figure 13**).

The two end pivots (**A**) fit into the sides of the treadle pedal and are then bolted to the mount bar with 4 bolts to hold it in position (**Figure 13-14**).

The rubber pad will be face up and the side with the bolt holes will be to the back of the table (away from the machine operator). These holes will be used to attach the treadle to the motor.

Tip: Install the pivots first but do not tighten completely. Then place the treadle in position between the pivots and tighten bolts. Flip the table upright and check to make sure the treadle moves freely after the bolts are tightened.

BEFORE CONTINUING: See "Attaching a Pulley" and "Installing the Workhorse Servo Motor" in the Workhorse Servo Motor Instructions.

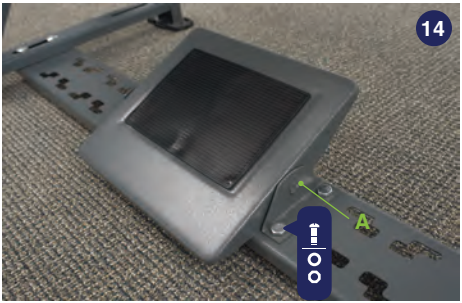

Installing the Linkage Bar

Bolt the L-bracket (**B**) to the holes on the back of the treadle so that its shorter leg is sticking out toward the back of the table pointing toward the Workhorse motor. (**Figure 15**). The short leg should be roughly vertical to the motor operation lever (**C**).

Bolt the linkage bar (**D**) to the outer most hole of the motor operation lever on the Workhorse and the L-bracket (**Figure 16**).

By increasing or decreasing the overlap of the linkage bar, different treadle pedal angles can be achieved. Use a size 14mm wrench to set the angle to your preference (**Figure 17**).

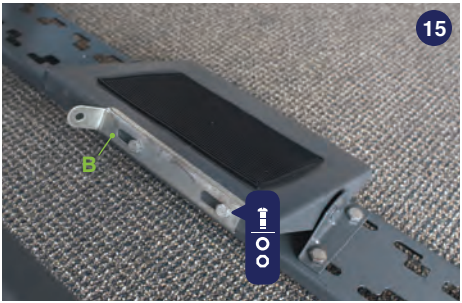

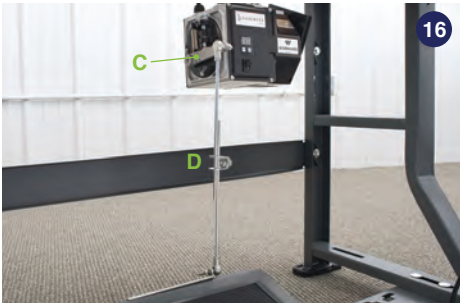

Oil Pan and Machine Installation

Locate the two back corner cushions (**A**), the two front corner cushions (**B**) and the two hinge cushions with chrome hinges (**C**).

Take out the cast aluminum oil tray (**D**) and slide the four corner cushions onto each respective corner flange (**Figure 18-19**).

With the table upright, tilt the tray into the tabletop cutout so that all four corner cushions drop down into the ledges. The edge of the oil tray with the crescent cutout should be facing the left side of the table, away from the belt slot. (**Figure 19**).

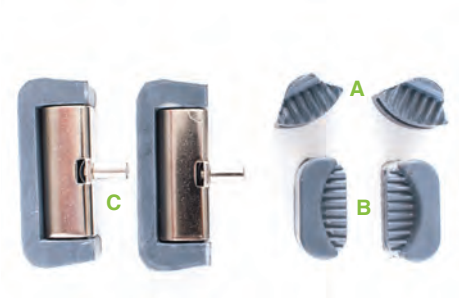

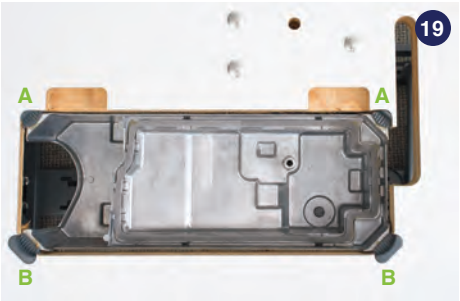

Push the machine Support Pin (**E**) into the hole in the tabletop nearest the carriage bolts holding the motor. The fit may be tight so just push until snug (**Figure 20**).

Insert the tapered end of the knee lift post connector (**F**) into the raised hole in the bottom of the oil tray (**G**) (**Figure 21**).

Find the magnet for the oil tray (**H**) and place it in the bottom of the oil tray (**Figure 21**).

Next, take the rubber pads off of the chrome hinges (**C**) and place them into their respective tabletop cavities (**I**). Insert the two chrome hinges into the two holes located on the back side of the sewing machine (**J**).

With help, lift and lower the sewing machine into the tabletop so that the chrome hinges fit into the rubber pads (**Figure 22**).

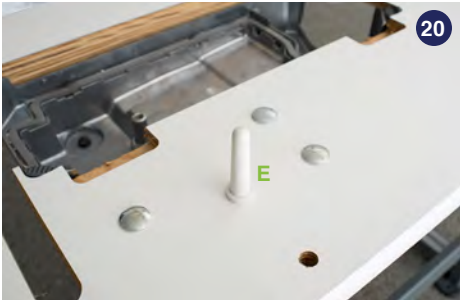

Check Motor Rotation

The machine's motor shaft should rotate counterclockwise when viewed from the motor shaft end. Plug in the motor, switch the power on and press down on the foot treadle to confirm operation now.

If motor rotation is not counterclockwise, please refer to "Changing Motor Rotation" in the Workhorse Installation Instructions.

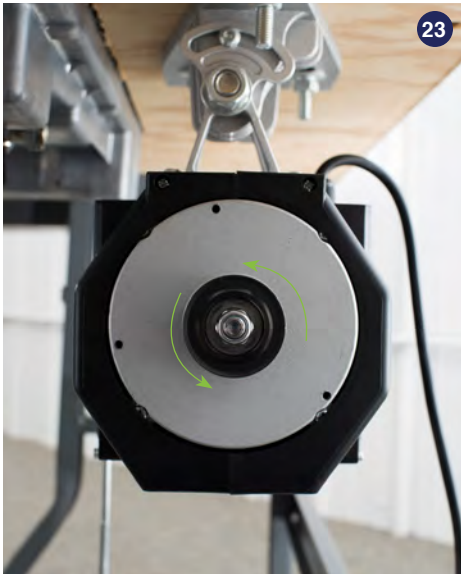

Securing the Stitch PRO Balance Wheel

Remove the Posi-Pin (wrapped in plastic) from the Posi-Pin Wheel Bushing on the upper shaft of the sewing machine.

Remove the three screws (**A**) for the belt cover installation (**Figure 24**). Position the C-shaped belt guard and reinstall the screws making sure washers are positioned as shims behind the guard to keep it from being bent out of shape (**Figure 25**).

Unscrew the reverse-threaded Posi-Pin Nut (**B**). Slide the Stitch PRO Balance Wheel onto the Posi-Pin Wheel Bushing (**C**), making sure it does not interfere with the belt cover. If the wheel hits the belt cover, reposition the washers placed under the C-shaped belt guard or move the bushing out further by loosening the set screws in the bushing.

Thread the reverse-threaded nut back onto the bushing and tighten by hand. Rotate the balance wheel until the hole in the balance wheel is aligned with one of the four bushing holes. Push the Posi-Pin (**D**) through the holes to lock the balance wheel to the bushing (it will spring back slightly). Rotation of the balance wheel will now cause the machine to function (**Figure 26**).

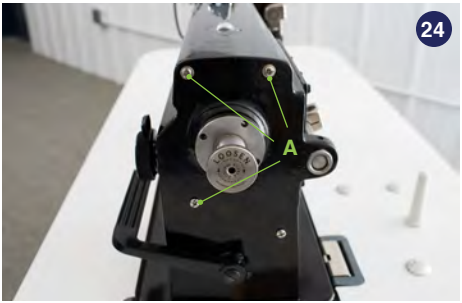

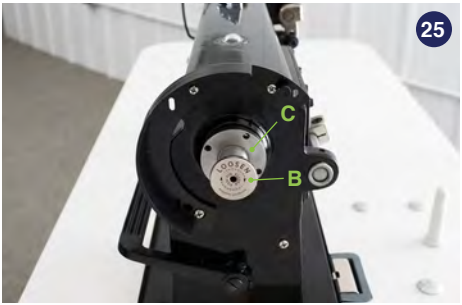

Belt Adjustment for the Workhorse Servo Motor

Before installing the drive belt, loosen the hex head set screw (**A**) with a 5/32" Allen wrench to allow the Workhorse Servo Motor to freely pivot (**Figure 27**). This will prevent the belt from stretching or breaking while being installed.

With the machine tilted back, slip the drive belt over the balance wheel track and guide it onto the motor pulley then carefully lower the machine into the cutout while judging belt tension (**Figure 28**). If the tension needs to be adjusted, follow the directions below:

Pivot the motor back to tighten the belt and forward to loosen it. Proper adjustment of the belt results in 3/8" of slack when pressed by finger at its center. Retighten set screw (**A**). The Linkage Bar may also need to be readjusted (page 8).

Once installed, the belt should not touch the table and should be centered on the track of both the balance wheel and motor pulley. Adjust the positioning of the motor left and right by loosening and sliding the bolts within the slots of the motor bracket.

Once the motor is in the correct position and all bolts are tightened, remove the belt so the pulley bracket can be installed.

BEFORE CONTINUING: See "Installing the Pulley Cover" in the Workhorse instructions.

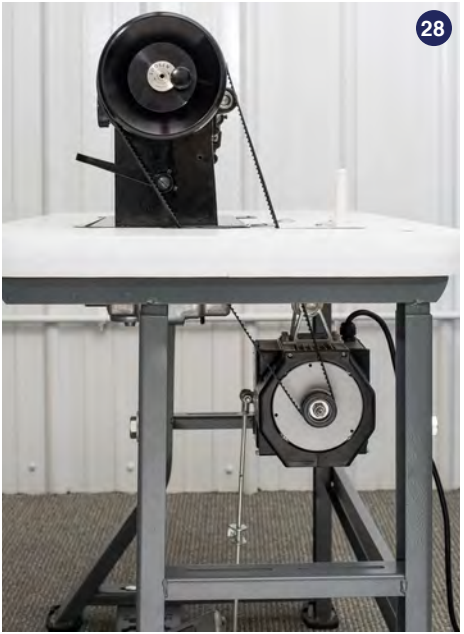

Attaching the Balance Wheel Belt Cover

Locate the remaining portion of the belt cover (**Figure 29**). It has a keyway (**B**) that locks onto post (**C**) of the C-shaped belt guard that was secured to the machine earlier (**Figure 30**). Connect the covers and remove the remaining screw in the machine casting (**D**) which is below the Stitch PRO Balance Wheel. Reinstall this screw through the slot at the bottom of the belt cover (**Figure 31**). Position the screw in the slot to provide proper belt clearance (typically all the way to the right end of the slot) (**E**).

29

30

31

Attaching the Bobbin Winder

Now screw the bobbin winder to the tabletop. The large wheel of the winder should be about 1/8" forward of the belt (no contact) (**Figure 32**) and in line with the belt. The long edge of the bobbin winder should be parallel to the belt slot in the table (**Figure 33**). Mark the location in each of the slots where the screws will be positioned.

Remove the bobbin winder and using a 5/32" drill bit, create pilot holes about 3/8" deep. Place the bobbin winder so the slots are positioned over the pilot holes. Mount the bobbin winder to the tabletop with the two screws (**A**) positioned in the bobbin winder slots.

Note: The bobbin winder should be disengaged before installation.

Pressing the thumb pad (**B**) will move the wheel into the belt in order to wind bobbins. The thumb pad is on a hinged bracket so that when thread has filled the bobbin, the mechanism will disengage the wheel from the belt.

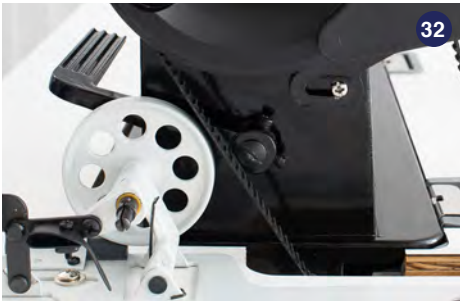

Mounting the Flex20 LED Light:

To attach the Flex20 LED light, place the light in your desired location on the machine and plug it into a wall socket (**Figure 35**).

Optional: Attach the included plastic clips to the back of the sewing machine and use the zip ties to hold the cord.

To attach the light to the front face of the machine (**C**), use the adhesive pad included with the Flex20 light.

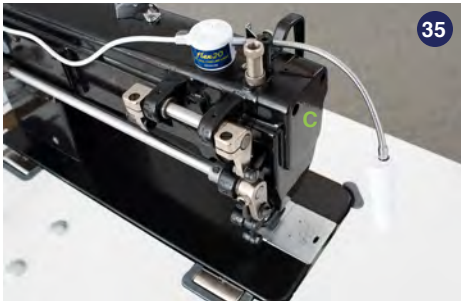

Mounting the Thread Stand:

Assemble the thread stand as shown (**Figure 36**). Secure it to the tabletop with included hardware.

Installing the Knee Lift Assembly

To install the knee lift lever (**A**) to the oil tray, slide the fitting onto the shaft which sticks out of the front of the oil tray (**B**). Position the bar so that the bend is facing toward the needle of the sewing machine and so the knee pad is easily engaged when sitting in front of the machine (**Figure 37**).

To lift the presser foot of the sewing machine, push the knee pad to the right and the foot will rise. Remove pressure and the foot will fall again.

The two set screws (**C**) found on the bottom of the oil pan determine how high the foot will lift and how much play there is in the knee lift lever when the presser foot is down. (**Figure 38**). These settings can be adjusted to suit the user's preference. The screw on the right, closest to the belt, will influence how high the foot will raise. Loosen the nut and lower the set screw. Push the knee lift lever until the foot is near the max height possible. Tighten the set screw until it touches the oil tray. Tighten the nut to hold its location.

To remove undesired slack in the knee lift lever, adjust the left set screw, closest to the needle. Loosen the nut and push the knee lift lever until just before it engages the foot. Leave about one inch of play then tighten the set screw until it touches the oil tray. Tighten the nut to hold its location.

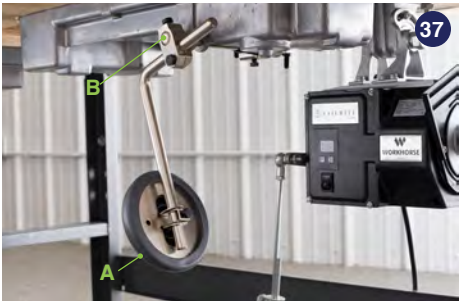

Check the Machine for Operation:

Plug the motor in and flip the power switch on the motor front. Verify that there is no thread going through the needle's eye and that the fabric sample is removed from under the foot. Make sure the presser foot is up and push down slowly on the top of the foot pedal to operate the machine. Use your heel to push the bottom of the pedal and the machine will stop. Turn the motor off.

See "Operation" in the Workhorse guidebook for more information and how to set the motor speed.

Auto Lubrication

Fill the oil tray with the oil found in the sewing machine box. Try to keep the oil level between the highest and lowest markings on the oil pan (**Figure 39**).

When it becomes necessary to change the oil, unscrew plug (**A**), wipe the dirty oil and the dust from the oil drip pan, replace the plug and add fresh oil. Use any high quality, clear sewing machine oil.

39

Controlling the amount of oil distributed to the entire machine:

The oil pump setting when you receive the machine is typically correct. If the machine is not getting enough oil, tilt the machine back and locate the sump (**B**). To increase oil flow, close the clearance of the adjusting plate (**C**) over the oil hole (**D**) to increase vacuum pressure (**Figure 40**).

Controlling the amount of oil distributed to the rotating hook:

The amount of oil getting to the hook can be adjusted by turning screw (**E**). Turn it clockwise to increase oiling or counterclockwise to decrease oiling. The range of adjustment is about five turns (**Figure 41**).

Note: If oil is splashing up through the needle plate when sewing, decrease the oil flow to the hook by turning the screw (**E**) counterclockwise.

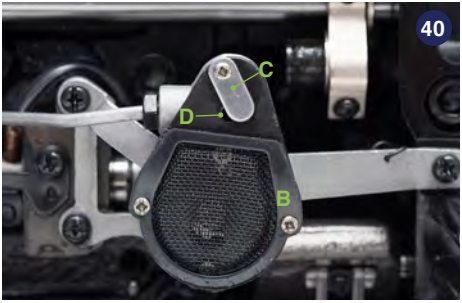

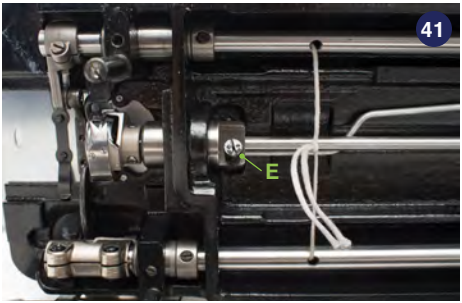

Manual Oiling

Remove the rubber plugs on top of the machine head (**A** & **B**) and put a small amount of oil in hole (**A**); then, lift the presser foot and run the machine at a moderate speed for a few seconds. (**B**) is an access hole to get to an internal oil port hole about 1" inside the machine. Occasional manual oiling of the hook and internal moving parts is recommended even for auto-lubricating sewing machines. Put a drop of oil on anything that looks like a gear, cam or slide (**Figure 42-43**).

Note: Once oiled, sew a scrap piece of material to make sure all excess oil is worked out of the machine so it does not leak onto your next project.

42

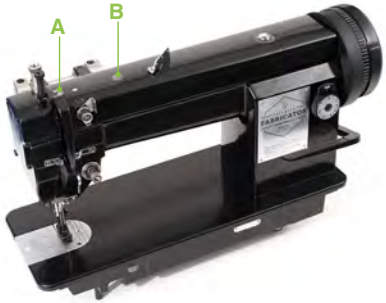

43

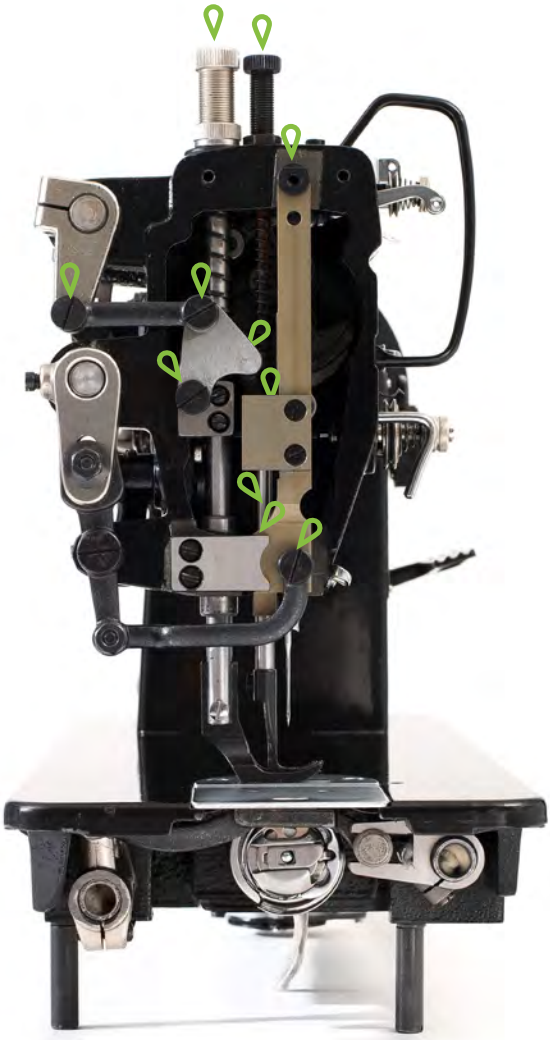

44

Using the Fabricator

Now that your machine is all set up, it's time to start sewing!

This next section will explain setting up the machine to sew including how to wind bobbins, thread the machine and adjust the tension.

COORDINATING THE NEEDLE, THREAD AND MATERIAL

The Sailrite Fabricator uses system 135 x 17 and 135 x 16 needles. Needle size depends on thread size and the fabric weight. Sewing heavy material with a small needle may result in needle breakage, skipped stitches or thread breaks, and too large of a needle may produce large holes that make tension adjustment sensitive and seams may leak. To select needle and thread combinations, see our recommendations on page 26.

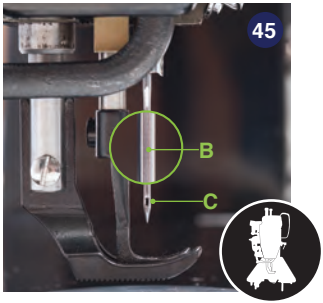

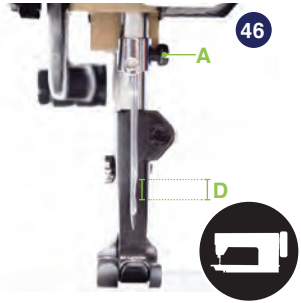

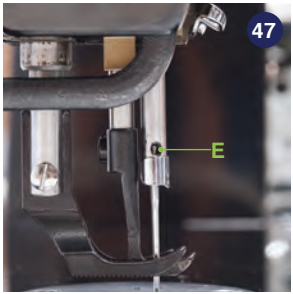

Installing Needles

Turn the balance wheel to lift the needle bar to its highest point. Loosen the needle set screw (**A**) and remove the old needle.

Needles have two distinct sides (**Figures 45-46**). One side has a long channel or groove (**B**) (locate this groove with your fingernail if you cannot see it) and the other side has a scarf (**D**) i.e., a carved out area just above the needle eye (**C**).

When inserting a new needle, make sure that the needle groove (**B**) is facing left when the operator is seated in front of machine (**Figure 46**) and that the needle shank is all the way up before tightening the set screw (**Figure 47**).

Tip: To make sure your needle is inserted far enough, you can look through the sighting hole (**E**) near the bottom of the needle bar. Lower the needle bar to its lowest position to have a better view. The top of the needle should be fully visible in the sighting hole and pushed all the way to the top.

Thread Recommendations

Polyester

Polyester is the most common choice for outdoor applications. Perfect for sail and canvas work, polyester thread has high strength and stretch control, stability in sunlight (UVR) and resistance to needle heat, abrasion, saltwater and mildew.

Nylon

Nylon threads have excellent elasticity, which makes them the perfect choice for upholstery projects. When you sit on a seat, you want the thread to be able to give and rebound under your weight. Nylon is excellent for indoor upholstery, automotive upholstery, luggage and more.

PTFE/Fluoropolymer

PTFE and fluoropolymer threads (Profilen & Tenara) come with a lifetime guarantee. These are the best threads to use for outdoor applications where your projects will see frequent, intense sun or other weather extremes. These threads are unaffected by exposure to UV rays, cleaning agents, pollution, saltwater, air, rain and snow.

Monofilament

Monofilament thread is a clear, strong nylon thread that blends in with fabrics. It is often used in upholstery because of its clear color.

STD	GOV	TEX	TENSILE (LBS)	NEEDLE SIZE	FABRIC WEIGHT
General Purpose	N/A	N/A	N/A	#10 or #12	< 6 oz
V-30	AA	30	4.5	#12 or #14	< 1.5 oz.
V-46	B	45	7.1	#14 or #16	< 3 oz.
V-69	E	70	10.6	#16 or #18	3 - 6 oz. & Sunbrella
V-92	F	90	14.2	#18 or #20	6 - 10 oz. & Sunbrella
V-138	FF	135	21.2	#20 or #22	> 10 oz.
Profilen/Tenara (V-92)	N/A	N/A	6.7 - 7.9 / 8 - 10	#14 or #16	3 - 20 oz. & Sunbrella
Heavy Tenara (V-138)	N/A	N/A	15 - 20	#19 or #20	> 15 oz.

This chart offers needle and thread size recommendations for sewing standard, woven fabrics. Needle and thread recommendations for sewing specialty fabrics are available online in our Thread & Needle Recommendation Guide, downloadable from every fabric detail page.

PREPARING TO SEW

Place a cone of thread on the thread stand, leading the thread up to the guide above the thread cone as shown (**Figure 48**). The following steps will show you how to wind a bobbin, put the bobbin in the bobbin case and thread the machine.

How to Wind a Bobbin

1. Push the bobbin on the bobbin winder spindle as far as it will go (**Figure 49**).

2. Pass the thread from the thread stand to the back end of the bobbin winder. Pull the thread through the hole near the thread tensioner (**A**) and then behind and under pulling the thread between the discs of the tensioner (**Figure 50**).

3. Bring the thread forward to the bobbin and push the thread tail through one of the holes in the bobbin from the inside. Pull the tail out about two inches (**Figure 51**).

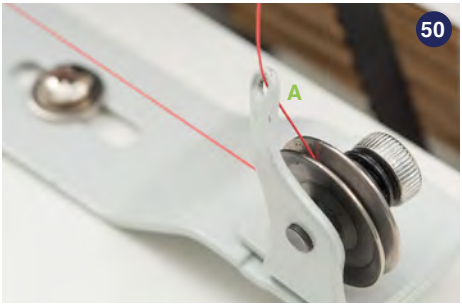

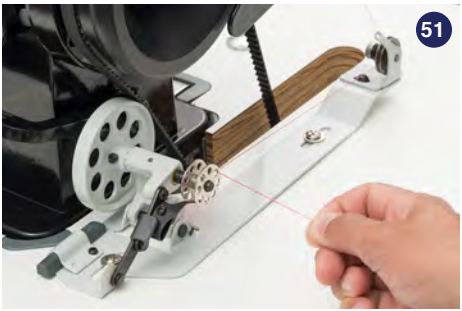

4. Push the bobbin winder lever (**A**) forward to move the wheel against the drive belt of the sewing machine (**Figure 52**).

5. Disengage the Posi-Pin clutch system to allow for bobbin winding without running the machine. Pull the pin out of the balance wheel and place it in the center hole, as shown, to store (**Figure 53**).

Note: Bobbins can also be wound while sewing.

6. Hold the thread tail and power the machine to start winding the bobbin. Cut the tail flush with the edge of the bobbin after about twenty rotations (**Figure 54**) and then continue under power until the bobbin is full. If adjustments are necessary, see “Bobbin Thread Winding Adjustment” on page 30.

7. To re-engage the clutch:

- Push the Posi-Pin gently into the hole in the balance wheel.
- Rotate the balance wheel while lightly pushing on the Posi-Pin until you feel it connect with any of the 4 bushings holes.
- Push the Pin all the way in and release.

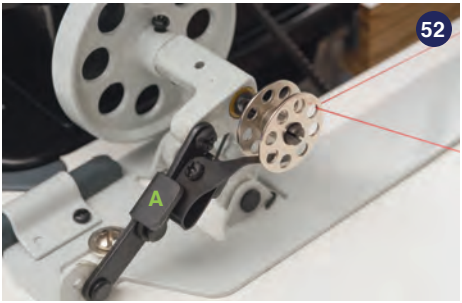

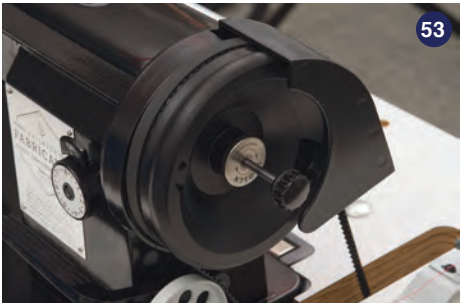

Bobbin Thread Winding Adjustment

If the wound bobbin thread is not tight, adjust the thread tension by turning the tension stud thumb nut of the bobbin winder (**A**). If the wound bobbin is not even, loosen screw (**B**) and move tension bracket (**C**) to the right when the bobbin is not filling enough on the right or move it to the left when the bobbin is not filling enough on the left. An even fill is desired (**Figure 56**). Once it is filling properly tighten screw (**B**).

Do not overfill the bobbin as the thread may jamb in the bobbin case. Fill it to about 80% of bobbin's outside diameter. Use the stop latch screw (**D**) to control the fill. Rotate the screw clockwise to increase the amount of thread on the bobbin and counterclockwise to decrease the amount of thread.

Note: The metal finger (**E**) can be bent by hand if more adjustment is required.

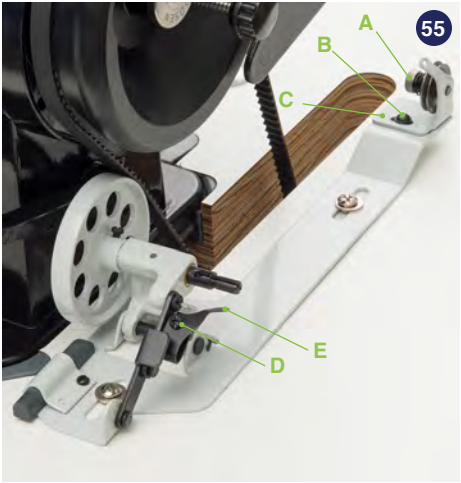

55

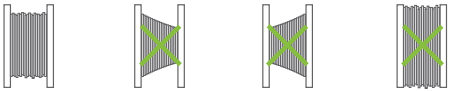

56

Removing and Installing the Bobbin Case

1. Rotate the balance wheel so that the needle is just about to enter the feed dog.

2. To remove the bobbin case, lift the spring loaded lever (**A**) and pull the bobbin case out. (**Figure 57**). Release the lever and the bobbin will fall out.

3. To install the bobbin case, lift and hold the spring loaded lever and push the case onto the axle of the shuttle assembly. The position of the bobbin case should be installed as shown, noting the directional position of lever (**A**) (**Figure 58**).

Images taken with machine tilted back

How to Thread the Bobbin

Insert the wound bobbin into the bobbin case (**Figure 59**).

The thread tail should remain outside of the case and be passed through the slot in the side of the case (**Figure 60**).

Pull the thread under the tension spring (**Figure 61**).

As you are holding the case with a view of the bobbin, the bobbin should turn clockwise when pulling on the thread tail (**Figure 62**). If it is not, take the bobbin out and flip it over.

Now refer back to “Removing and Installing the Bobbin Case” page 31 to put the bobbin case back in the machine.

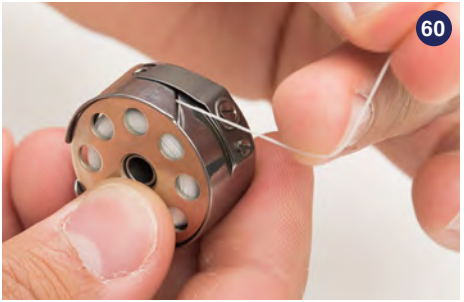

Threading the Sewing Machine

1. Raise the needle bar to its highest position by rotating the balance wheel.

2. Thread comes off the top of the cone to the thread stand arm (**A**).

3. Pass the thread toward you through the far right hole of the three hole thread guide (**B**); then, up over the top and through the leftmost hole.

4. Pass the thread through the top hole of guide (**C**), bring thread around to the front, then through the bottom hole of guide (**C**).

5. Pull the thread over the top of and between the tension disks (**D**), then down through (**E**).

6. Pass the thread around and between the tension disks (**F**), in a clockwise motion being sure the thread goes all the way to the core post.

7. Pass the thread up through the thread take up spring (**G**).

8. Pass the thread under the thread guide (**H**).

9. Lead the thread upward through the elongated thread finger (**I**) and then through the take-up arm (**J**) from right to left.

10. Lead the thread down through thread finger (**K**) then (**L**) and then through the needle bar thread guide (**M**) from front to back.

11. Pass the thread from left to right through the eye of the needle (**N**) and draw the thread about 4 inches through the needle eye.

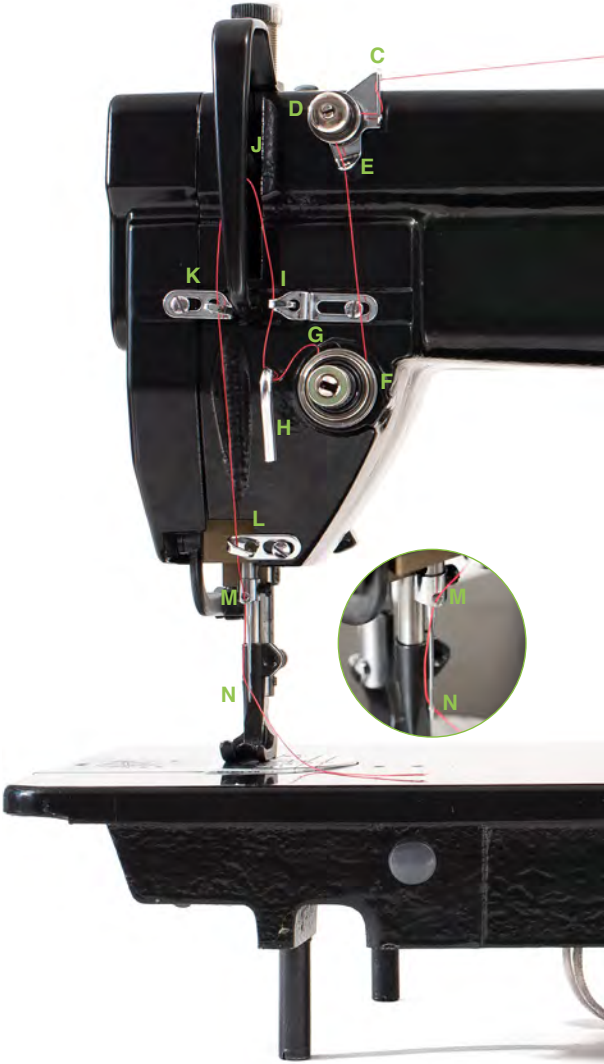


B
A
I
PUSH
SAILRITE
FABRICATOR
Sewing Machine
Needle Type:
135 x 17, 135 x 16
Presser Foot Lift
Bobbin Size:
Needle Size:
Thread Range: General Purpose up to V-138
Patented Technology #7438009

Pulling Up the Bobbin Thread

To pull up the bobbin thread, make sure the presser feet are up, grasp the end of the needle thread (**A**) then rotate the top of the balance wheel toward you to lower the needle. Continue to rotate the wheel until the needle is once again in its highest position. Pull on the needle thread (**A**) and the bobbin thread (**B**) will be drawn up through the needle plate (**Figure 64**).

Use a small instrument (seam ripper, screwdriver, pencil etc.) to slide under the feet and pull both threads outward (**Figure 65**). The needle thread (**A**) should be through the inner presser foot when completed.

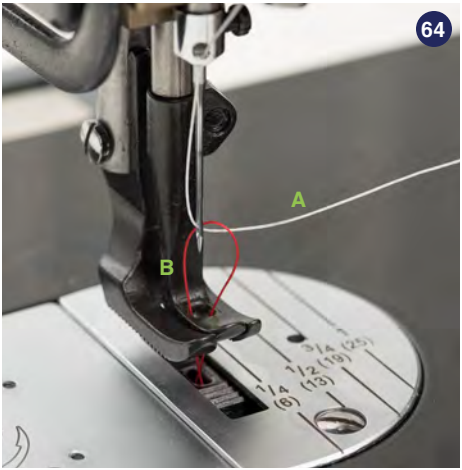

SEWING WITH THE SAILRITE FABRICATOR

Starting to Sew

1. Use the hand lever (C) or knee lift (page 17) to raise the presser feet. Then place the material to be sewn under the feet and use the hand lever/knee lift to lower it onto the material.

2. The threads from the needle and bobbin should be behind the feet as you start to sew. Hold them down with your finger.

3. Press the motor pedal to begin sewing. After the first couple stitches are made, you may let go of the thread ends. (If the thread ends are not held down for the first few stitches, they may get tangled.)

Always turn the balance wheel of the machine toward you to reduce the possibility of a thread jam in the lower mechanism.

Never operate the machine (when threaded) without material under the presser foot.

Setting the Stitch Length and Operating in Reverse

The stitch length regulating dial (**A**) indicates the stitch length in millimeters. Lift the presser feet and press the tab labeled “PUSH” to unlock the dial. Rotate the dial within its range of 0mm and 8mm to your desired stitch length.

Do not force the dial beyond the ends of the range.

To sew in reverse, press lever (**B**) down fully. Forward movement is automatically restored when lever (**B**) is released. It is best to initiate reverse when the machine is in motion, but you may also manually rotate the balance wheel so the needle is either in its highest or lowest position before pressing the reverse lever and starting to sew.

Adjusting the Pressure of the Presser Feet

Different materials require different presser foot pressure in order to feed properly. Heavy materials require more foot pressure and light materials sometimes pucker with too much foot pressure. To increase foot pressure, loosen the two lock nuts (**C**) and turn the pressure regulating thumb screws (**D**) clockwise as shown (**Figure 68**).

To reduce pressure, loosen the two lock nuts (**C**) and turn the two pressure regulating thumb screws (**D**) counterclockwise as shown (**Figure 69**).

After adjustment, tighten the lock nuts. The two screws should always be maintained at roughly the same height.

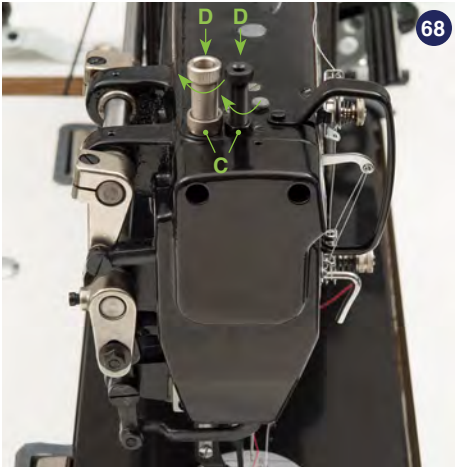

68

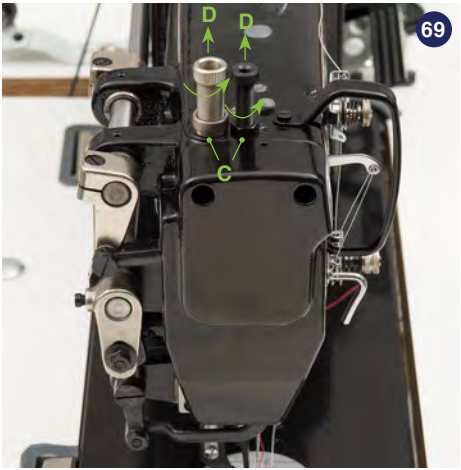

69

Adjusting Upper Tension Assemblies

Tension adjustment refers to the combination of tension on both the upper thread and the bobbin thread.

The tension knobs can be turned clockwise or counterclockwise in order to compress/release a spring that squeezes the two disks together increasing/decreasing tension. The pretensioner (**A**) should be used when minor adjustments are required. All other adjustments should be made with the main tension assembly (**B**).

A good starting tension point for sewing heavy canvas is when the outside surface of the tension nut (**C**) is flush with the end of the post (**D**) it is threaded on.

When the presser foot is lifted, the upper tension disks are separated. This releases the top thread tension so fabric can be removed from under the machine foot without fighting thread tension.

DO NOT lift the presser foot when the main tension knob (**C**) is less than a 1/2 turn from maximum (turned snugly clockwise).

If upper tension is tightened all the way down, raising the presser foot may bend the lever inside the machine that separates the disks, preventing the disks from opening correctly.

Adjusting Bobbin Thread Tension

The correct combination of thread tension (**Figure 71**) results in a stitch that looks identical on both sides of the material (i.e., the knots of the stitches are pulled into the fabric and are no more visible on the top than on the bottom).

When stitch tension is a problem, it is usually a consequence of too much or too little tension on the upper thread.

Tension changes to the bobbin thread should only be made when upper tension changes alone do not solve stitch tension problem. In general, bobbin tension requires just about a two-ounce drag on the thread (similar to what you feel when pulling dental floss off a spool).

Note: Always set the machine with too little tension first and then slowly increase the upper tension to the point that the knots just disappear on the bottom side of the fabric.

71

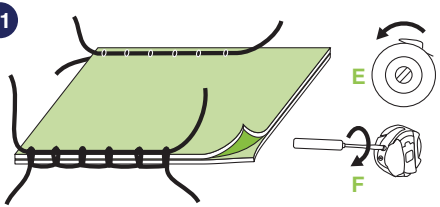

Knots pulled to top:

1. Decrease upper tension (E)
2. Increase bobbin case tension (F)

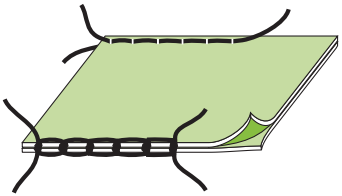

Knots centered — Perfect Stitch

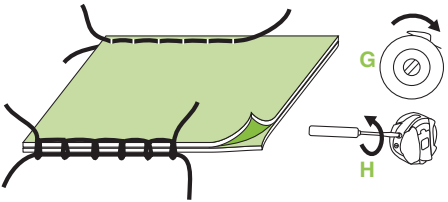

Knots visible on bottom:

1. Increase upper tension (G)
2. Decrease bobbin case tension (H)

Removing Material from Under the Presser Feet

1. Stop the machine with the needle at its upward-most position.

2. Lift the hand lever to raise the presser foot or use the knee lift.

3. Pull the material straight back to remove it from under the foot.

Note: It is sometimes helpful to rock the balance wheel forward and back to free the thread from the tension assembly.

Sewing in Light to Moderate Weight Fabrics

1. Be sure to use an appropriate thread. Nylon thread is often preferred for interior upholstery.

2. Select an appropriately sized needle, i.e. match the fabric and thread weight to the needle size. Don't be afraid to experiment. See page 26 for needle and thread recommendations.

3. Decrease pressure on the feet. In heavy fabrics, more pressure aids in feeding. In lighter fabrics, too much foot pressure may pucker the fabric. See **Figure 68-69** for the location of the thumb screws to adjust the foot pressure.

4. Decrease the upper thread tension. Too much upper thread tension will cause puckering of the fabric. It may be necessary to increase pressure on the bobbin case spring when using light weight thread. The bobbin spring will not clamp down on the smaller diameter thread like it does on heavier thread. See page 39 & 40 for tension adjustment.

Fabricator Maintenance

After years of use, industrial sewing machines usually require a few adjustments.

This section explains in detail how to make the adjustments most often made by sewing machine mechanics on industrial machines. This knowledge empowers you to be able to maintain the Fabricator yourself.

Feed Dog Height Adjustment

The feed dog should be 0.8-1.2mm above the surface of the needle plate when at the top of its travel. If this needs adjusted, tilt the machine so it is hinged back in the table and loosen screw (**A**) to adjust the feed dog height as needed (**Figure 72**).

Normally, the feed dog should be completely level, but in some instances, setting one end higher than the other may help fix some common problems.

Setting the front of the feed dog in the lowest position may prevent puckering and reduce skipping of stitches. Setting the front in the highest position may prevent material from sliding and can reduce breakage of the bobbin thread. When sewing conditions require tilting the feed dog one way or the other, use the following procedures:

Loosen screw (**B**) and press against the slot of the eccentric shaft (**C**) with a screwdriver to turn the shaft left or right (**Figure 73**). Tighten screw (**B**) when the feed dog is tilted as desired.

There is a small, black mark (**D**) on the eccentric shaft. Use this mark to determine the desired tilt of the feed dog (**Figure 74**).

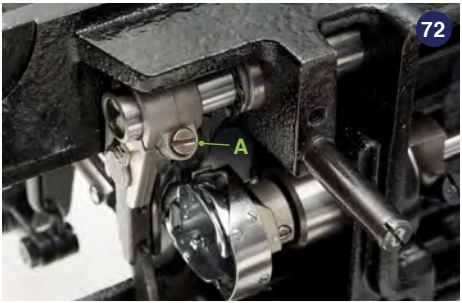

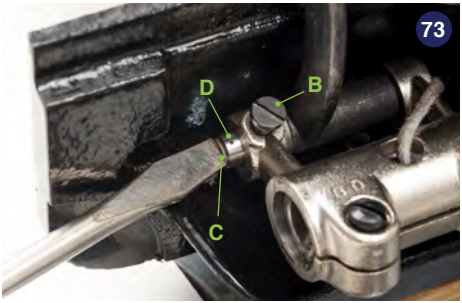

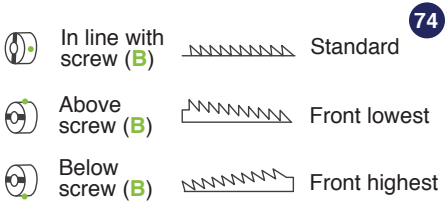

Note: These drawings are exaggerated.
Feed dog tilt is far less noticeable

Setting the Feed Dog Position

When the stitch length regulator is set at its maximum length (8mm), rotate the balance wheel so that the feed dog is as far forward as possible. The front end of feed dog should be very close to the front needle plate opening. The distance between the two should be about 1.5mm (**Figure 75**).

If it needs adjustment, tilt the machine so it is hinged back in the table and loosen screws (**E**) (**Figure 76**). Then, move the feed dog support (**F**) up or down which will move the feed dog forward or back within the needle plate opening. After proper adjustment, tighten screws (**E**).

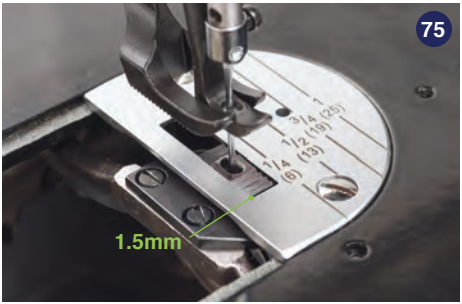

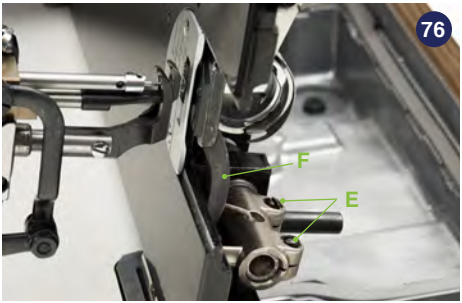

Note About Adjustments:
Any adjustments made in this section (p. 44-49) will alter subsequent settings. Once a change has been made, all adjustments on the following pages need to be made to ensure proper timing. For example, if a change is made on page 45, changes outlined on pages 46-49 must be done to maintain proper timing.

Adjusting Needle Position & Clearance Between Presser Feet

To prevent the inner presser foot from striking the outer presser foot at the end of feeding, the needle should be positioned in the center of the feed dog hole. Rotate the balance wheel so the inner presser foot is at its furthest back position, toward the outer presser foot (**Figure 77**). The two presser feet should not touch. Now rotate the balance wheel so the feed dog is as far forward as possible (away from outer presser foot). The needle should be centered in the feed dog hole.

If it needs adjustment, loosen the screw for the motion shaft crank (**Figure 78**) and notice that the needle moves near the back of the feed dog hole. Grabbing the needle bar and inner presser foot, hold them in a position so that needle is in the center of the feed dog hole (**Figure 79**). Tighten the screw (**Figure 78**) when positioned properly. Make a full rotation of the balance wheel and confirm the inner and outer presser feet still don't touch (**Figure 77**).

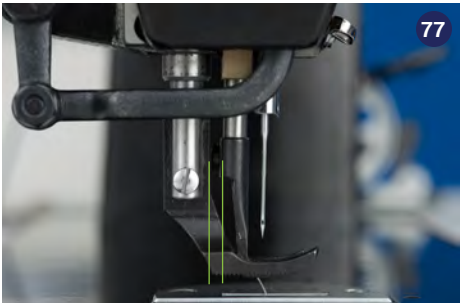

If adjustment is made, please refer to the "Note About Adjustments" on page 44.

Timing Between the Needle & the Rotating Hook

When timing the Sailrite Fabricator, it is important that the needle bar height is correct. Anytime the needle bar height is changed, it is critical that the timing be checked and, if necessary, reset to ensure the proper operation of your machine.

To set the needle bar height on the Sailrite Fabricator:

1. Make sure a #20 needle is installed.

2. Set the stitch length indicator to its lowest setting by pressing the “PUSH” tab and rotating the knob clockwise toward 1mm stitch length.

Note: the reverse lever will not move up or down after this is done.

3. Remove the faceplate found on the left side of the machine (**Figure 80**). The 2 screws that secure the faceplate to the machine are found in the recessed holes at the top of the faceplate (**A**).

4. Rotate the balance wheel until the needle is at the bottom of its stroke.

5. Tilt the machine back and loosen the needle bar clamp (**B**) (**Figure 81**) and adjust the height of the needle bar so that the top of the bobbin is at the center of the eye of the needle (**Figure 82**).

Note: when adjusting the height of the needle bar take care to not rotate the needle bar.

6. Tighten the needle bar clamp (**B**) securely.

7. Re-install the faceplate.

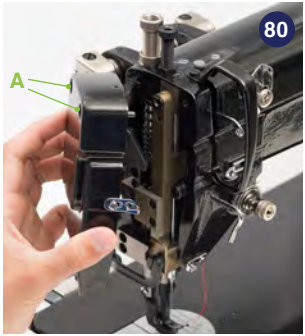

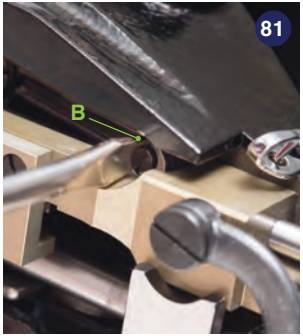

If adjustment is made, please refer to the “Note About Adjustments” on page 44.

To set the machine's timing:

1. Tilt the machine back and remove the slide plate by sliding it all the way to the left until it comes off of the machine (**Figure 83**).

2. Raise the presser feet and rotate the balance wheel until the needle is at the highest position. Remove the needle plate and the feed dog; each is held in place by two screws (**Figure 84**).

3. Ensure that the stitch length indicator is set to its lowest setting by pressing the "PUSH" tab and rotating the knob clockwise toward the 1mm stitch length (**Figure 85**).

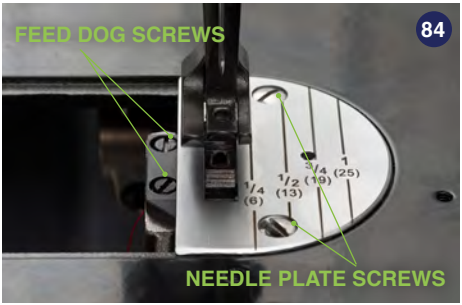

4. Rotate the balance wheel until the needle is at the bottom of its stroke.

5. Continue to rotate the balance wheel until the needle comes up 2.5mm from its lowest setting (**Figure 88**).

To do this, rotate the balance wheel so that the needle is at it's lowest position. Make a mark on a paper 2.5mm from the edge. Hold the paper up to where the needle bar meets the machine casting and make a mark on the bar at the 2.5mm location (**Figure 86**).

Rotate the balance wheel until the mark lines up with the machine casting (**Figure 87**).

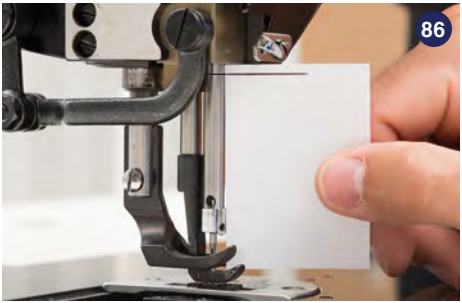

6. The point of the hook should be lined up with the vertical centerline of the needle (**Figure 89**) and a very small gap of about 0.5mm should exist between the needle and the hook (**Figure 90**).

7. To adjust, rotate the balance wheel and loosen each of the 3 screws (**A**) holding the hook in place (**Figure 91**). Repeat steps 4 and 5 and set the hook so that the requirements in step 6 are met.

8. Tighten each of the 3 screws (**A**) holding the hook in place. Take care not to disturb the positioning of the hook. Go back and ensure each of these 3 screws are secure to ensure that the timing does not slip during machine usage.

9. Re-install the feed dog and needle plate taking care to center (left/right) the feed dog in the needle plate.

Note: Loosen the most convenient screw to access last when in the step 6 position. This one screw can be adjusted alone as timing is fine tuned. Be certain to tighten all three screws when the timing is perfect.

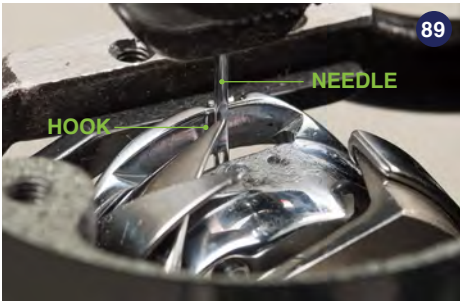

Adjusting the Presser Foot Lift

The relationship of the two feet affects the ability of the machine to transition from thin to thick materials. If a foot is getting stuck on the fabric, adjustment may be necessary. Having the outside presser foot set at the recommended maximum height will improve feeding of varied thickness fabric assemblies.

Generally, for sewing heavy and medium weight fabrics, the outside presser foot height should be about 4mm and the height of the inside presser foot should be at about 2mm.

When the outside presser foot height is increased, the inside foot lift will decrease proportionately. Decreasing the height of the outside presser foot will increase the height of the inner foot and smooth the sewing/feeding operation.

To adjust the relationship between the two feet, lower the presser feet and rotate the balance wheel until the outside presser foot is in the upmost position. Next, loosen the screw for the crank (B) (there are 2 cranks about 4" apart and either one will make the adjustment). After loosening the screw, grab the outer presser foot and manually move it up or down as desired (set between 2mm and 4mm above the needle plate). Tighten the screw when done.

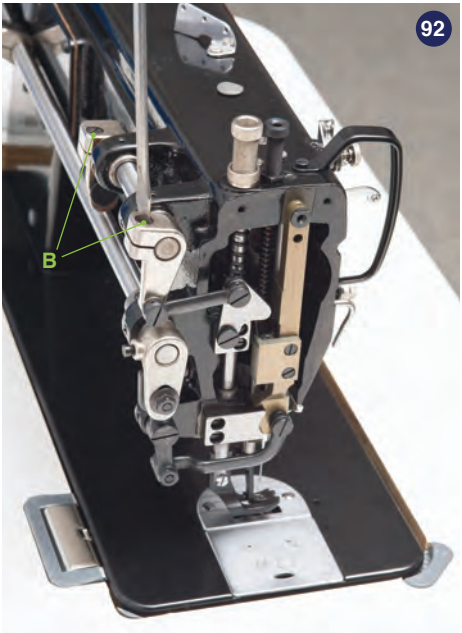

Adjusting the Vertical Lift of the Outer Presser Foot

Sailrite sets the outer presser foot at the maximum height. **DO NOT** further increase foot height or the machine will jam during operation.

The amount of lift of the outer presser foot is increased or decreased with pivot slide (**A**). When moved up, the range of movement of the presser foot is increased (lifts higher) allowing the machine to better feed applications with thickness transitions. Sliding the pivot down lowers the lift height and makes feeding smoother, which will help when sewing delicate fabrics.

Adjustment of the outer presser foot vertical lift with the pivot slide (**A**) will not affect the inside presser foot lift.

Sailrite does not recommend making this adjustment. If you believe this setting needs to be altered on your machine, please call and speak with a technician before making any changes.

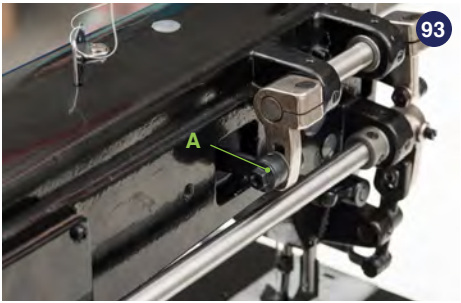

Adjusting Feed Timing of the Needle Bar, Presser Foot and Feed Dog

1. Raise the presser foot and set the stitch length regulator to maximum (8mm). Turn the balance wheel to lower the needle into the hole of the feed dog and check to see if the needle is centered in the hole at the feed dog's forward most position (**B**).

Note: If the needle if not centered in the Feed Dog hole (**B**), see page 45.

2. Keep turning the balance wheel until a full rotation is achieved. If the needle is still centered in the feed dog hole (**B**) throughout the movement, then the mechanism is timed properly. If it ends up in position (**C**), this indicates that the feed amount of the needle bar and presser foot is larger than that of the feed dog. To correct this, you will need to reduce distance (**D**)**.** Use a wrench and loosen the nut. Slide the nut and its connected pivot block up. If the timing is off and the needle ends up at position (**E**), then the feed amount of the needle bar and presser foot is smaller than that of the feed dog. In this case, enlarge distance (**D**) as explained above but slide the nut down. Make adjustments until the needle arrives at (**B**) (the center of the feed dog hole at the end of the rotation).

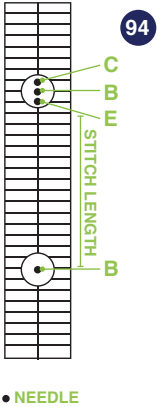

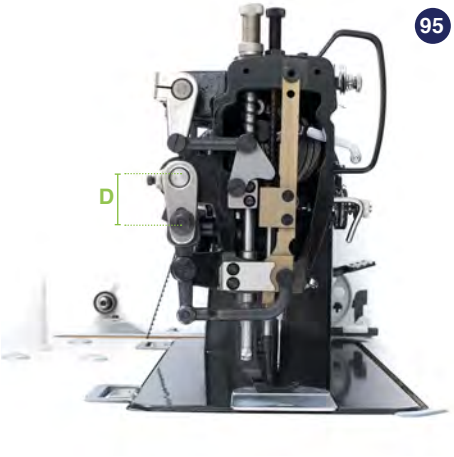

Stitch Length Adjustment Between Forward and Reverse

Set the machine to the longest stitch length possible (8mm) and tilt the machine so it is hinged back in the table.

Loosen screw (**A**) and (**B**), located on the shaft below the oil sump, and take out link pin (**C**) (**Figure 96**).

This will allow the length regulator (**D**) to pivot down (**Figure 97**) so that the slotted cam (**E**) can be accessed through the link pin hole (**F**). Loosen screw (**G**) to adjust the cam (**E**) with a small, standard screwdriver (**H**) (**Figure 98**).

Note: Hold the reverse lever down for better access to cam (**E**)

Turn the slotted cam clockwise to shorten the forward stitch length and lengthen the reverse stitch length. Turn the cam counterclockwise to lengthen the forward stitch length and shorten the reverse stitch length.

Reassemble the pivot by replacing the link pin (**C**) through the length regulator (**D**) and link (**F**) as it was before making the adjustment. The flat on the link pin shaft should face screw (**A**). Retighten all screws.

Note: Do not rotate the balance wheel while disassembled as it will disrupt the timing of the machine.

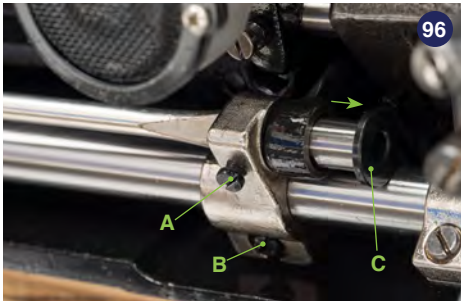

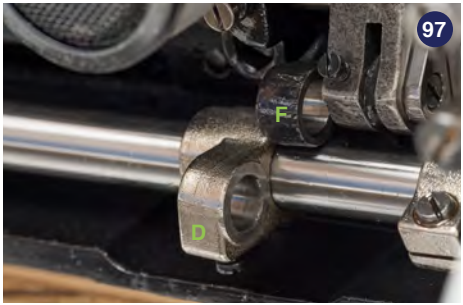

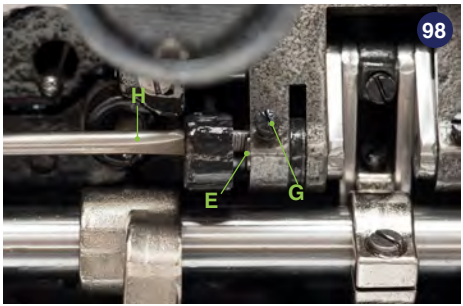

Adjusting the Thread Take-Up Spring

The normal sewing range of the thread take-up spring is 7/32" to 1/2". When sewing light weight materials with a short stitch length, decrease the spring tension and increase the travel of the spring to as much as 1/2". For sewing heavy weight materials, increase the spring tension and shorten its travel to as little as 7/32".

To adjust the travel of the thread take-up spring: Loosen set screw (I) and turn the complete tension assembly clockwise to increase the spring range (up to 1/2") or turn it counterclockwise to decrease the spring range (down to 7/32") (**Figure 99**).

To adjust the thread take-up spring tension: Lower the presser feet to relieve pressure on the tension assembly. Loosen the tension stud set screw (**A**), turn tension stud (**B**) clockwise with a screwdriver (**C**) inserted in the split shaft end to provide more spring tension, or counterclockwise to decrease tension. After adjustment, tighten the tension stud set screw (**A**) while pushing the tension stud in so that it is seated fully as it was before loosening (**Figure 100**).

Note: To make this adjustment it is often necessary to remove the whole tension assembly from the machine to gain access to screw (**A**). Remove by loosening set screw (**I**) (page 54) then pull out the assembly. Make sure to notice the insertion depth of the tension assembly core before doing this. When done, the core should be reset to the same depth.

To set spring tension as it was originally set by Sailrite: Loosen set screw (**A**) first and then turn the tension stud (**B**) counterclockwise to reduce the tension of thread take-up spring (**D**) to zero. From here, turn the tension stud (**B**) clockwise until the spring (**D**) just comes into contact with the end of the slot on the thread take-up spring regulator. Then, further turn tension stud (**B**) clockwise by 3/8". After adjustment, tighten tension stud set screw (**A**).

The thread take-up spring was properly adjusted before the machine was shipped. Readjustment is needed only in the case of sewing special materials or thread.

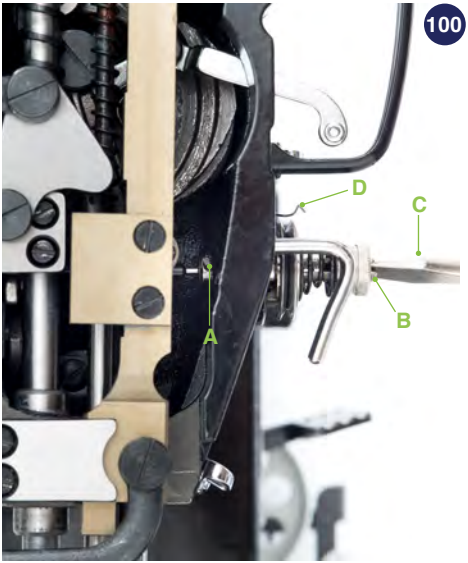

TROUBLESHOOTING

Skipped Stitches

If your machine is skipping stitches the hook is not catching the thread consistently. This is usually because either the thread is not being held down by the fabric as the needle is withdrawn which does not allow for the loop of thread to be formed for the hook as it passes the needle, or the hook may not be passing the needle at the proper time. It may be passing the needle before a loop is formed or, at the opposite extreme, after the thread has been pulled upward out of the path of the hook.

Four Ways to Eliminate Skipped Stitches

1) CHANGE THE NEEDLE: The first thing to do is simply change the needle. A bent needle will cause skipped stitches because the loop is not where the hook expects it to be. The needle could also have become covered with adhesive if you are using basting tape or sewing insignia cloth. In either case, the new needle will resolve these problems.

Also, make sure that the needle is in correctly (page 25), and check the upper thread path (page 33). The thread should pass from left to right through the needle eye.

2) ADJUST THE FOOT PRESSURE: Next, check for adequate foot pressure. Heavy, closely-woven materials like sailcloth and canvas can make the withdrawal of the needle from the fabric difficult. If the presser foot is lifting as the needle comes out of the cloth, the effect is the same as if the needle were not going far enough into the cloth. The loop that it forms will be too small. To solve this problem, more downward pressure must be placed on the feet (page 38).

3) RESET THE NEEDLE BAR HEIGHT: If skipped stitches continue to be a problem, the machine has most likely gone out of time. Check the height of the needle bar as described in “Timing Between the Needle and the Rotating Hook” on page 46.

4) CHECK THE TIMING: If the needle bar height is set properly and poor stitching still results, check the timing or the positioning of the hook. See “To set the machine’s timing” on page 47.

Lack of Stitch Tension

Refer to the section titled “Adjusting Upper Tension Assemblies” and “Adjusting Bobbin Thread Tension” on pages 39-40. If adjustments still do not result in proper thread tension, move to the next larger needle and adjust the elongated thread guide (**A**) position as shown (**Figure 101**).

101

102

Material	Thread Guide Position
Light (less tension)	
Medium	
Heavy (more tension)	

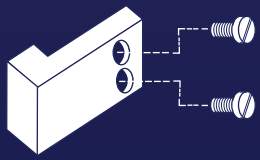

Fabricator Schematics

Understand the ins and outs of the Fabricator with complete parts and systems schematics.

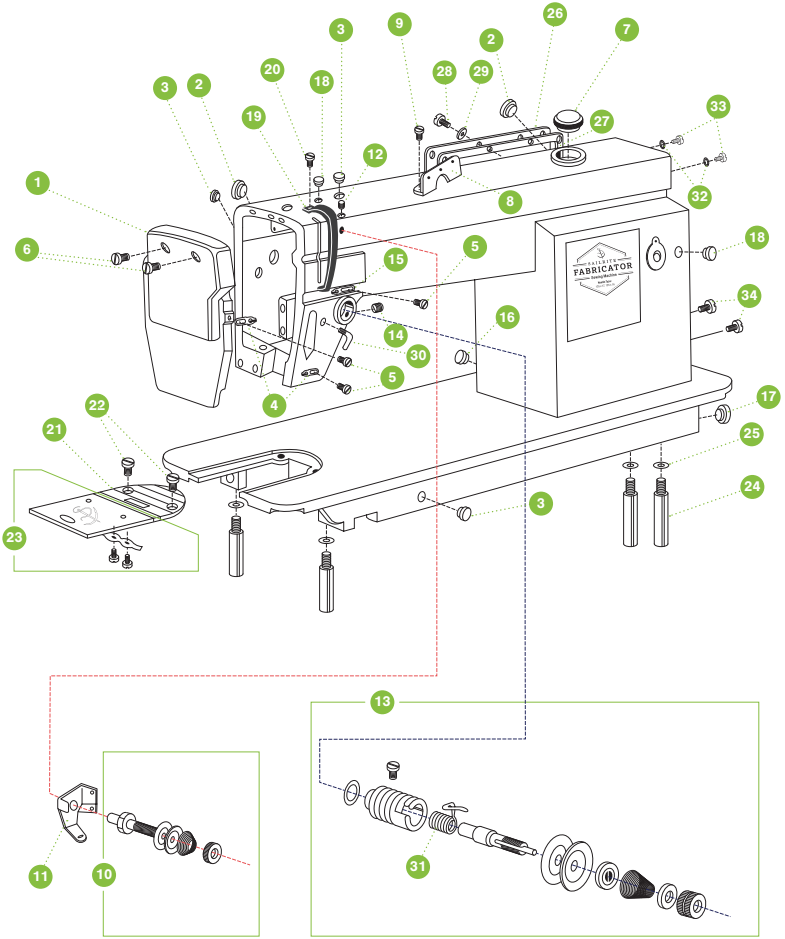
1
2
3
4
5
6
7
8
9
10
11
12
13
14
15
16
17
18
19
20
21
22
23
24
25
26
27
28
29
30
31
32
33
34
FABRICATOR

Machine Arm and Bed

No.	Name	Part#
1.	Face Plate	**35T4-402a**
2.	Rubber Plug (19)	**22T1-003C3**
3.	Rubber Plug (11.7)	**22T1-003C4**
4.	Thread Finger	**22T1-003C5**
5.	Screw for Thread Finger	**22T1-003C6**
6.	Screw for Face Plate	**22T1-004**
7.	Oil Window	**22T1-008**
8.	Three Hole Thread Guide	**36T2-004**
9.	Screw for Three Hole Thread Guide	**36T2-005**
10.	Small Thread Tension Assembly	**104895**
11.	Thread Pass-by Plate	**36T2-006DI**
12.	Screw for Small Tension Assembly	**22T1-011**
13.	Large Thread Tension Assembly	**103297**
14.	Set Screw	**22T1-013**
15.	Elongated Thread Finger	**22T1-014**
16.	Rubber Plug (8.8)	**22T1-015**
17.	Rubber Plug (27)	**22T1-016**
18.	Rubber Plug (5.7)	**22T1-017**
19.	Thread Take-up Lever Guard	**33T4-007**
20.	Lock Screw	**22T2-004**
21.	Needle Plate	**110743**
22.	Screw for Needle Plate	**22T1-020**
23.	Slide Plate Assembly	**120625**
24.	Bed Legs	**7WF4-013**
25.	Washer	**GB93 6**
26.	Back Cover	**5WF3-002**
27.	Gasket for Back Cover	**5WF3-003**
28.	Screw for Back Cover	**22T1-006**
29.	Washer for Back Cover	**22T1-007**
30.	Thread Guide	**35T4-405**
31.	Thread Take Up Spring for Fabricator	**20129**
32.	Belt Cover Small Screw Washer	**GB/T86 M4**
33.	Belt Cover Small Screw	**GB/T86 M3**
34.	Belt Cover Large Screw	**GB/T86 M5**

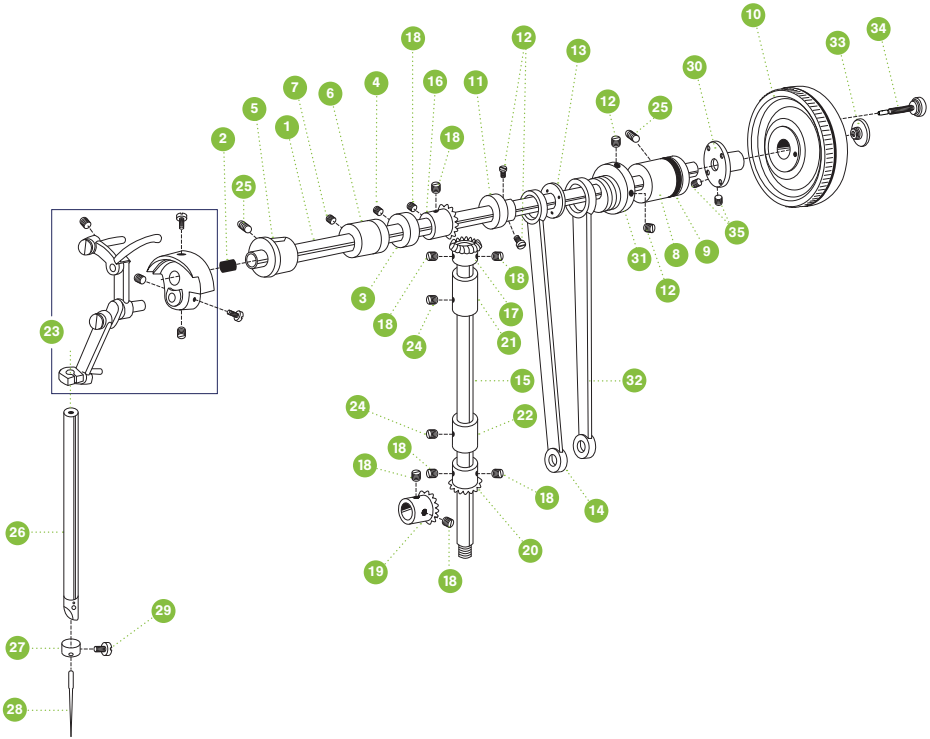
10
34
33
18
12
13
30
7
6
4
16
11
12
25
5
1
2
18
25
35
31
8
9
18
12
3
17
18
24
21
23
15
32
24
22
18
18
18
14
26
20
19
18
29
27
28

Arm and Vertical Shafts, Needle bar Thread Take-up Parts

No.	Name	Part#
1.	Upper Shaft	**4WF1-001A**
2.	Rubber Bushing Plug	**22T3-001A2**
3.	Collar	**22T3-002B1**
4.	Screw for Collar	**22T3-002B2**
5.	Front Bushing	**4WF1-006A**
6.	Middle Bushing	**4WFI-002**
7.	Screw for Middle Bushing	**J0.0.40**
8.	Rear Bushing	**22T3-005**
9.	Oil Seal for Rear Bushing	**22T3-006F**
10.	Stitch PRO Balance Wheel	**107161**
11.	Feed Dog Lift Cam	**36T3-003D1**
12.	Screw for Cam	**36T3-003D2**
13.	Separating Cam Piece	**36T3-004**
14.	Front Feed Link	**22T3-09D1C**
15.	Vertical Shaft	**15WF1-001**
16.	Bevel Gear for Upper Shaft	**22T3-010E2a1-2**
17.	Upper Gear for Vertical Shaft	**22T3-010E2a2-2**
18.	Screw for Bevel Gears	**22T2-005B3**
19.	Bevel Gear for Lower Shaft	**22T3-010E2b1-2**
20.	Lower Gear for Vertical Shaft	**22T3-010E2b2-2**
21.	Upper Bushing	**4WF1-003**
22.	Lower Bushing	**33T1-023P**
23.	Thread Take-up Lever Assembly	**3TI-023A**
24.	Screw for Bushing/Cam	**61-04-01/B308**
25.	Screw for Bushing	**J0.0.5**
26.	Needle Bar	**102503**
27.	Needle Bar Thread Guide	**104099**
28.	Needle 135 x 17 (22)	**153**
29.	Needle Screw	**103012**
30.	Posi-Pin Wheel Bushing for Fabricator	**120624**
31.	Feed Cam	**36T5-008E1**
32.	Rear Feed Link	**4WF2-009A**
33.	Posi-Pin Nut - Reverse Thread	**100536**
34.	Posi-Pin Quick Release Shaft	**102043**
35.	Set Screw for Posi-Pin Wheel Bushing	**713100**

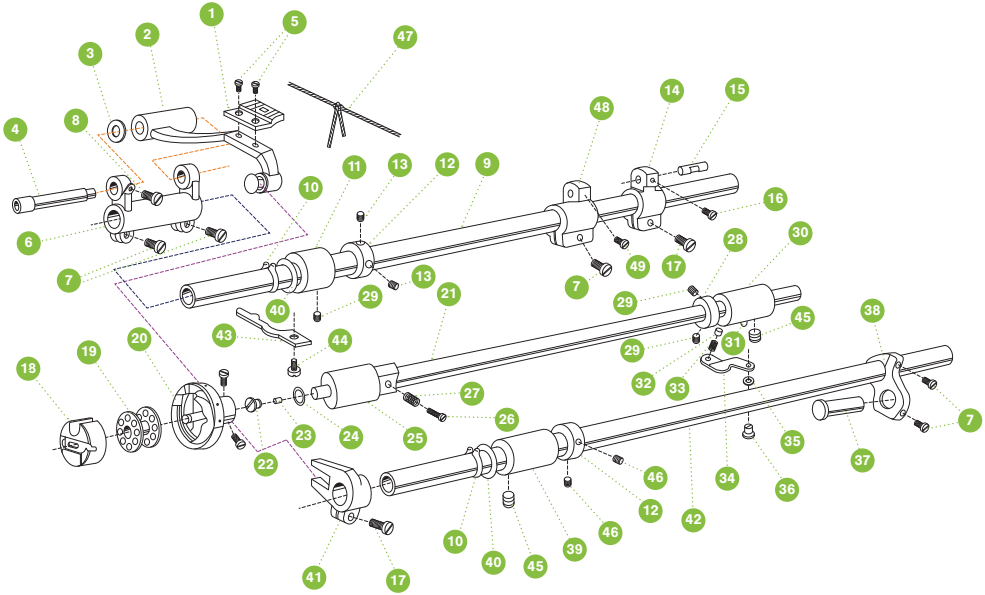
1
2
3
4
5
6
7
8
9
10
11
12
13
14
15
16
17
18
19
20
21
22
23
24
25
26
27
28
29
30
31
32
33
34
35
36
37
38
39
40
41
42
43
44
45
46
47
48
49

Feed Dog Lift and Feed and Thread Looping

No.	Name	Part#
1.	Feed Dog	100387
2.	Feed Dog Support	36T4-001A1a
3.	Washer for Feed Dog Support	4WF2-011
4.	Eccentric Shaft for Feed Dog Support	36T4-001A2
5.	Screw	J0.0.51
6.	Feed Dog Support Crank	4WF2-002
7.	Screw for Feed	61-04-01/B504
8.	Positioning Screw	22T2-019
9.	Feed Rock Shaft	36T4-002
10.	Stop Ring	GB894.1 15
11.	Bushing for Feed Rock Shaft	22T6-004
12.	Collar	22T3-002B1
13.	Screw for Collar	22T3-002B2
14.	Feed Shaft Rear Crank	4WF2-006
15.	Link Pin for Feed Shaft Rear Crank	82T2-003C1a10-2
16.	Screw for Link Pin	36T5-008E5
17.	Screw for Crank	22T6-008D3
18.	Bobbin Case	100742
19.	Bobbins (Style M)	651123
20.	Rotary Hook	110742
21.	Lower Shaft	36T4-008D1
22.	End Screw for Lower Shaft	22T4-001A1a1
23.	Plug for End Screw	22T4-001A1a2
24.	Oil Seal for Front Lower Shaft	22T4-003
25.	Front Lower Shaft Bushing	4WF1-05
26.	Oil Regulating Screw for Hook	22T4-005
27.	Spring for Oil Regulating Screw	22T4-006
28.	Collar for Lower Shaft	22T4-002B1
29.	Screw for Lower Feed	J0.0.35
30.	Rear Lower Shaft Bushing	4WF1-004
31.	Oil Tube Connector	22T4-007C2
32.	Plunge for Rear Lower Shaft	36T4-015
33.	Spring for Rear Lower Shaft	36T4-016
34.	Stopper for Rear Lower Shaft	22T4-010
35.	Washer	GB93 6
36.	Screw for Stopper	22T9-006
37.	Hinge Pin for Feed Lift Rear Crank	22T6-007
38.	Feed Lift Rear Crank	4WF2-003
39.	Feed Lift Shaft Bushing	22T6-012
40.	Washer for Feed Lift & Rock Shaft	51T5-013
41.	Feed Lift Fork	36T4-018H101
42.	Feed Lift Shaft	36T4-018H2
43.	Position Bracket	104476
44.	Screw for Position Bracket	22T4-015
45.	Screw for Front & Rear Bushing	J0.0.05
46.	Screw for Collar	22T3-002B2
47.	Oil Wick	22T6--008D3
48.	Feed Shaft Front Crank	5WF4-002
49.	Screw for Link	36T5-008E3

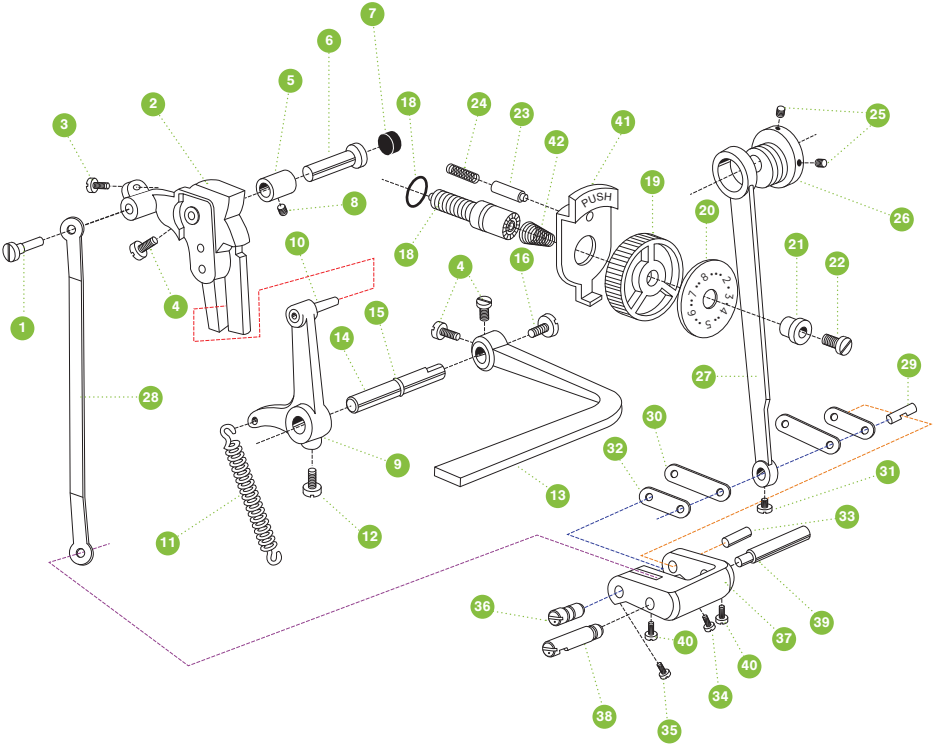
PUSH

Feed Mechanism

No.	Name	Part#
1.	Link Pin for Stitch Length Bracket	4WF2-012
2.	Stitch Length Bracket	7WF2-012
3.	Screw for Stitch Length Link Pin	20T2-031
4.	Screw for Stitch Length	22T5-010D4
5.	Bushing for Stitch Length Bracket Shaft	5WF1-003
6.	Shaft for Stitch Length Bracket	22T5-004
7.	Rubber Plug (18)	36T5-003
8.	Screw for Bushing	J0.0.5
9.	Reverse Feed Lever Crank	7WF2-009
10.	Reverse Feed Lever Crank Shaft	22T5-012E1a1
11.	Spring for Reverse Feed Lever Crank	1KT3-002
12.	Screw for Reverse Feed Lever Crank	22T5-013
13.	Reverse Feed Lever	4WF2-007A
14.	Pin Shaft for Reverse Feed Lever	22T5-010D2a
15.	O-type Ring for Reverse Feed Lever Pin Shaft	GB345 2.1 6.3x1.8G
16.	Screw for Reverse Feed Lever	22T5-010D3
17.	Screw Bolt for Stitch Length	36T5-007D1
18.	O-type Rubber Ring for Screw Bolt	33T2-030-A
19.	Stitch Dial Wheel	36T5-007D2
20.	Stitch Dial Face	4WF2-004A
21.	Bushing for Stitch Dial	36T5-007D4
22.	Screw for Stitch Dial	36T5-007D5
23.	Stop Pin for Stitch Dial	36T5-012
24.	Spring for Stitch Dial Stop Pin	22T5-009
25.	Screw for Cam	36T3-003D2
26.	Feed Cam	36T5-008E1
27.	Rear Feed Link	4WF2-009A
28.	Stitch Adjusting Link	4WF2-009B
29.	Pin for Rear Feed Link	1a10-I
30.	Link for Rear Feed Link	36T5-008E4H02
31.	Screw for Link Pin	36T5-008E5
32.	Link for Stitch Length Adjusting Crank	36T5-008E4H01
33.	Pin for Stitch Length Adjusting Crank Link	36T5-008E6
34.	Screw for Stitch Length Crank Link Pin	36T5-008E7
35.	Screw for Stitch Length Slotted Cam	36T5-008E8
36.	Stitch Length Slotted Cam	36T5-008E9
37.	Stitch Length Adjusting Crank	36T5-008EI0
38.	Left Set Pin	5WFI-002
39.	Right Set Pin	5WFI-001
40.	Screw for Crank	22T6-008D3
41.	Stitch Length Push Lever	36T5-011
42.	Spring for Stitch Dial	36T5-010

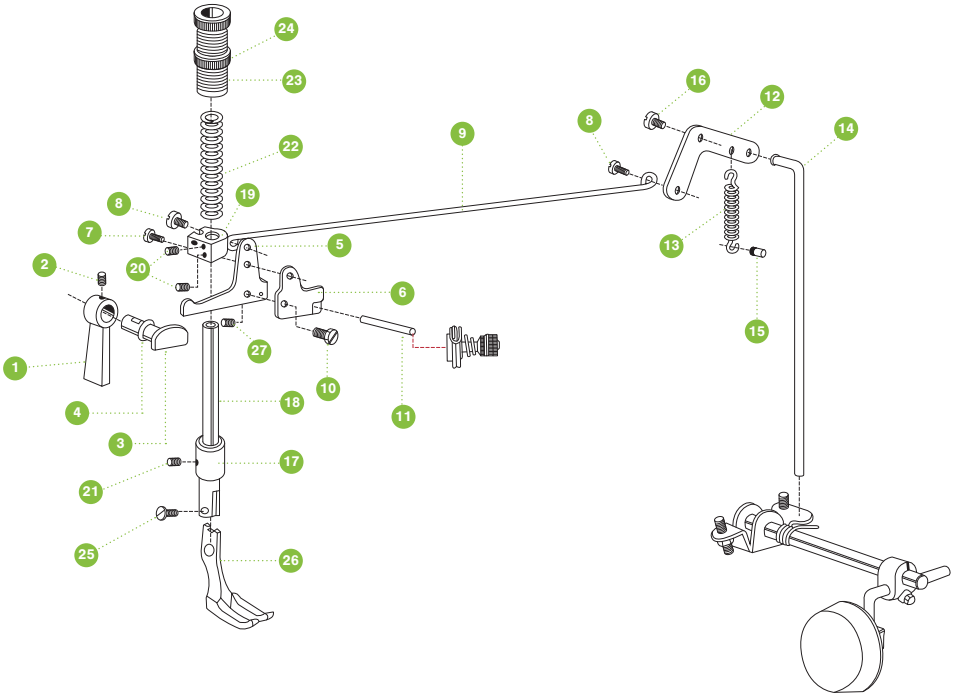
24
23
22
19
8
7
2
20
1
4
3
21
25
27
18
17
26
5
6
10
11
9
8
16
12
14
13
15

Presser Foot

No.	Name	Part#
1.	Presser Foot Lift	33T-003
2.	Screw for Presser Foot Lift	22T1-011
3.	Presser Foot Lift Cam	4WF3-002
4.	Oil Seal for Presser Foot Lift Cam	22T7-004B1
5.	Presser Foot Lift Lever	22T7-004B1b
6.	Thread Releasing Cam	22T7-004B1c
7.	Screw for Presser Foot Lift Lever	22T7-004B2
8.	Screw for Knee Lifter Draw Bar	22T7-004B3
9.	Knee Lift Draw Bar	22T7-005A
10.	Screw for Thread Releasing Cam	22T7-006
11.	Thread Releasing Pin	35T3-305
12.	Knee Lift Lever	22T7-007C2
13.	Spring for Knee Lift Lever	4WF3-001
14.	Knee Lift Connecting Rod	1KT4-006
15.	Pin for Knee Lift Lever Spring	22T7-005B
16.	Pivot Screw for Knee Lift Lever	35T3-303
17.	Bushing for Outer Presser Bar	34T3-305
18.	Presser Bar for Outer Foot	35T3-302
19.	Presser Bar Lift Block	35T3-301
20.	Screw for Presser Bar Lift Block	22T2-013
21.	Screw for Outer Presser Bar Bushing	34T3-302
22.	Tension Spring for Outer Presser Bar	34T3-301
23.	Outer Foot Presser Regulating Thumb Screw	1KT4-001
24.	Nut for Outer Presser Regulating Thumb Screw	1KT4-002
25.	Screw for Outer Presser Foot	61-04-01/B316
26.	Outer Presser Foot	35T3-304
27.	Lock Screw for Bushing/Cam	61-04-01/B308

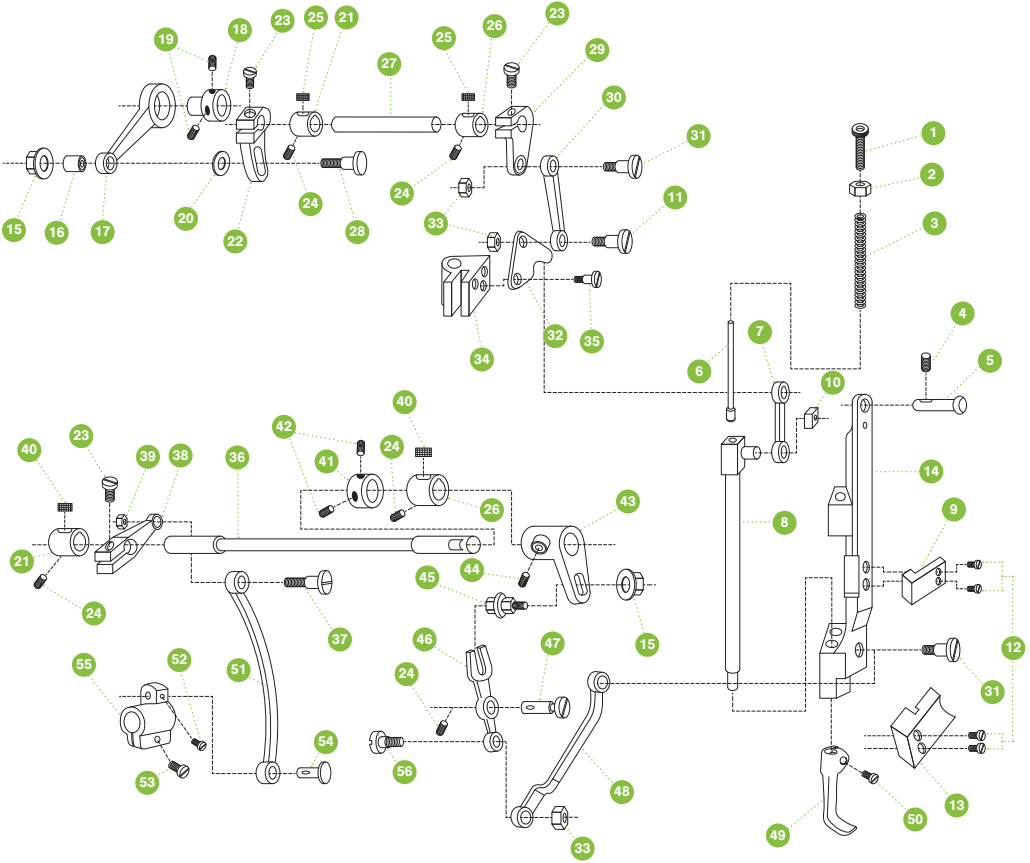
19
18
23
25
21
27
25
26
23
29
30
31
1
2
3
15
16
17
20
22
24
28
24
33
11
34
32
35
4
5
7
6
10
40
42
24
41
26
43
14
9
8
40
23
39
38
36
21
24
44
45
37
15
12
31
46
47
55
52
51
24
54
56
53
48
33
13
50
49

Upper Feed Parts

No.	Name	Part#
1.	Inner Foot Regulating Thumb Screw	35T5-503
2.	Nut for Inner Foot Regulating Thumb Screw	34T5-503
3.	Tension Spring for Inner Foot Bar	35T5-501
4.	Screw for Needle Bar Bracket Pivot Pin	J0.0.40
5.	Pivot Pin for Needle Bar Bracket	35T5-504
6.	Reel for Tension Spring	35T5-505
7.	Link for Inner Foot Bar	35T5-507
8.	Presser Bar for Inner Foot	35T5-508
9.	Sliding Box for Inner Foot Bar	6WF5-002
10.	Sliding Block for Inner Foot Bar	33T1-013
11.	Screw for Upper Needle Motion Link	34T5-513b
12.	Positioning Screw	22T2-019
13.	Sliding Box for Needle Motion Bracket	35T5-511
14.	Needle Bar Motion Frame	6WF5-001
15.	Nut for Inner Foot Bar Feed	34T5-518
16.	Washer for Inner Foot Bar Feed Nut	34T5-519
17.	Link for Inner Foot Eccentric Cam	34T5-520
18.	Inner Foot Eccentric Cam	34T5-516
19.	Set Screw	22T1-013
20.	Washer for Needle Motion Components	34T5-521
21.	Rear Bushing for Upper/Lower Needle Motion	34T5-538a
22.	Upper Rear Needle Motion Crank	34T5-517
23.	Screw for Needle Motion Cranks	34T5-540
24.	Screw for Bushing/Cam	61-04-01/B308
25.	Oil Felt For Upper Needle Motion Bushings	34T5-536b
26.	Front Bushing for Upper/Lower Needle Motion	34T5-536a
27.	Upper Needle Motion Shaft	34T5-537
28.	Screw for Needle Motion Components	34T5-522
29.	Front Needle Motion Shaft Crank	34T5-535
30.	Link for Upper Needle Motion Shaft	34T5-534
31.	Screw for Forward Needle Motion Links	34T5-507
32.	Presser Foot Lift Plate	35T5-506
33.	Nut for Forward Needle Motion Links	34T5-508
34.	Presser Bar Lift Block	35T3-301
35.	Screw for Presser Foot Lift Plate	34T5-527
36.	Lower Needle Bar Motion Shaft	34T5-539
37.	Screw for Lower Rear Needle Motion Crank	17T4-002
38.	Lower Rear Needle Motion Shaft Crank	5WF4-004
39.	Nut for Lower Rear Needle Motion Crank	J0.0.63
40.	Oil Felt for Lower Needle Motion Bushings	34T5-538b
41.	Collar for Lower Needle Motion Shaft	34T5-532
42.	Screw for Collar	22T3-002B2
43.	Lower Front Needle Motion Crank	34T5-533
44.	Screw for Lower Front Needle Motion	34T5-541
45.	Sliding Block for Needle Motion Fork	34T5-531
46.	Fork Lever for Needle Motion	34T5-529
47.	Pin for Needle Motion Fork Lever	34T5-530
48.	Link for Lower Needle Motion Shaft	35T5-512
49.	Inner Presser Foot	35T5-502
50.	Lock Screw	22T2-004
51.	Link for Feed Shaft Front Crank	5WF4-003
52.	Screw for Link	36T5-008E3
53.	Screw for Feed	61-04-01/B504
54.	Connecting Pin for Feed Shaft Front Crank	5WF4-001
55.	Feed Shaft Front Crank	5WF4-002
56.	Screw for Needle Bar Motion Fork Lever	34T5-513a

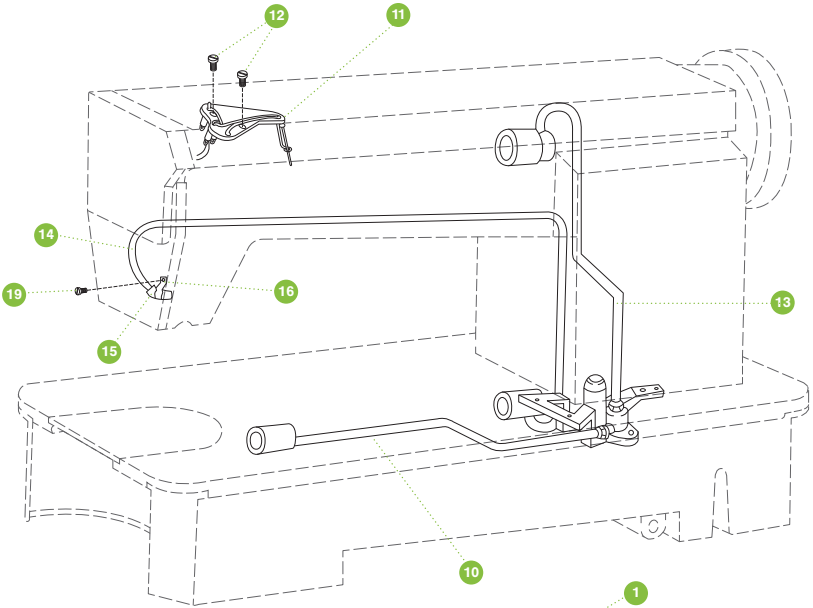
12
11
14
19
16
13
15
10

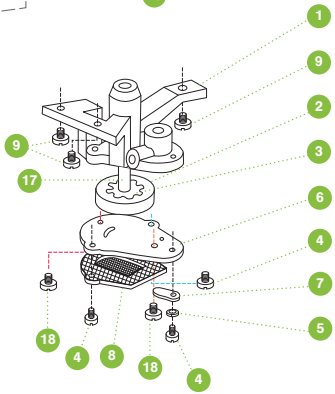
1
9
2
9
3
17
6
4
7
5
18
4
8
18
4

Oil Pump

No.	Name	Part#
1.	Oil Pump	**15WF4-003**
2.	Large Gear for Oil Pump	**15WF4-006**
3.	Small Gear for Oil Pump	**15WF4-007**
4.	Screw for Oil Filter	**GB/T67 M3X10**
5.	Washer for Oil Regulating Plate	**GB93 4**
6.	Cover for Oil Pump	**15WF4-004**
7.	Oil Regulating Plate	**22T8-007**
8.	Oil Filter	**22T8-008A**
9.	Screw for Oil Pump	**22T8-009**
10.	Lower Oil Pipe	**4WF4-005**
11.	Oil Wick Plate	**33T4-018**
12.	Screw for Oil Wick Plate	**22T8-012**
13.	Upper Oil Pipe	**22T8-013D**
14.	Oil Tube	**22T8-014**
15.	Oil Tube Felt	**22T8-015**
16.	Clamp for Oil Felt Tube	**22T8-016**
17.	Shaft for Large Oil Pump Gear	**15WF4-005**
18.	Screw for Oil Pump Cover	**GB/T68 M3X10**
19.	Screw for Oil Tube Felt Clamp	**20T4-006**

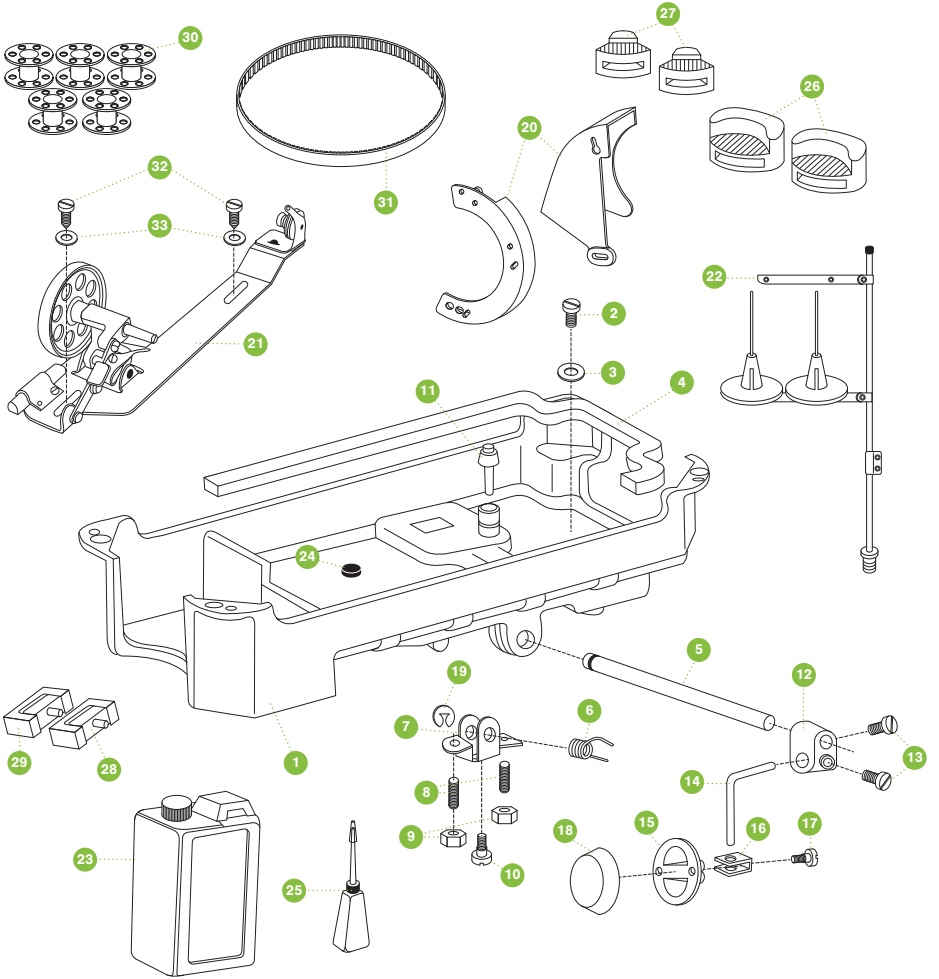
30
27
26
20
32
31
33
22
2
21
3
4
11
24
5
19
12
7
6
29
28
1
13
14
8
9
18
15
16
17
23
10
25

Oil Reservoir & Accessories

No.	Name	Part#
1.	Oil Tray	4WF5-001
2.	Screw for Oil Tray Drain	22T9-001A2
3.	Washer Oil Tray Drain Screw	22T9-001A3
4.	Gasket for Oil Tray	2KT9-008
5.	Hinge Shaft for Knee Lift	22T9-001A6
6.	Spring for Knee Lift Stop Bracket	22T9-001A7
7.	Knee Lift Stop Bracket	22T9-001A8
8.	Screw for Knee Lift Stop Bracket	22T9-001A9
9.	Nut for Knee Lift Stop Bracket Screw	22T9-001A10
10.	Stop Bracket Attachment Screw	22T9-036
11.	Knee Lift Post Connector	4WF5-002
12.	Knee Lift Connector	22T9-003B3
13.	Screw for Knee Lift Connector	GB/T5781 M6X12 M6X20
14.	Bent Rod for Knee Lift	22T9-003B2
15.	Knee Lift Plate	22T9-003B5
16.	Knee Lift Bracket	22T9-003B6
17.	Screw for Knee Lift Bracket	22T9-003B7
18.	Pad for Knee Lift Plate	22T9-003B8
19.	Stop Ring for Knee Lift Hinge Pin	GB896 9
20.	Belt Cover for Professional & Fabricator	120616
21.	Bobbin Winder	103276
22.	Thread Stand	14F0-00
23.	Oil Jug	22T9-017
	Refill Oil for Sewing Machines	23800
24.	Magnet for Oil Tray	22T9-012
25.	Oil Spout	33TF-011
26.	Front Corner Cushion	429
27.	Back Corner Cushion	438
28.	Machine Hinge	22T9-007F1
29.	Rubber Cushion for Machine Hinge	22T9-007F2
30.	Bobbins (Style M)	651123
31.	Timing Belt	120580
32.	Wood Screw for Bobbin Winder	GB5282 ST4.8X19
33.	Washer for Bobbin Winder Screw	GB/T95 6

MACHINE SPECIFICATIONS

APPLICATION	Light, Medium & Heavy-Duty
SEWING SPEED	123 spm to 1108 spm
MAX STITCH LENGTH	0-8mm (Straight Stitch Only)
PRESSER FOOT LIFT	Hand 6.5mm (1/4"), Knee Lift 14mm (9/16")
NEEDLE	System 135 x 17 & 135 x 16 Sizes #10 - #24
SHUTTLE	Full Rotary, Gear Driven, Large Style M Bobbin
LUBRICATION	Auto Lubrication
WEIGHT	79 lbs.
BED SIZE	18.75" X 7"
UNDERARM SPACE	10.25" X 5"
BUILT-IN KNEE LIFT	Yes

The sewing machine casting does not have an internal motor. It is powered by Sailrite's exclusive Workhorse Servo motor using Sailrite's patented Posi-Pin system (Pat. #7438009) and Stitch PRO Balance Wheel.

SAILRITE

FABRICATOR

Sewing Machine

Needle Type:
135 x 17, 135 x 16

2-Year Limited Warranty

ALL PARTS & LABOR ARE FULLY GUARANTEED FOR 2 YEARS BY SAILRITE.

We are proud to provide you with everything you need to successfully maintain and repair your Fabricator Sewing Machine. Should you choose to return your machine for repairs, you will be responsible for delivery both ways.

PLEASE NOTE:
Damage due to improper use or neglect, impact damage and normal wear from use of the sewing machine as well as sacrificial components and notions (needles, needle plate, feed dog, rotary hook, bobbins and belt) are not covered under this warranty.

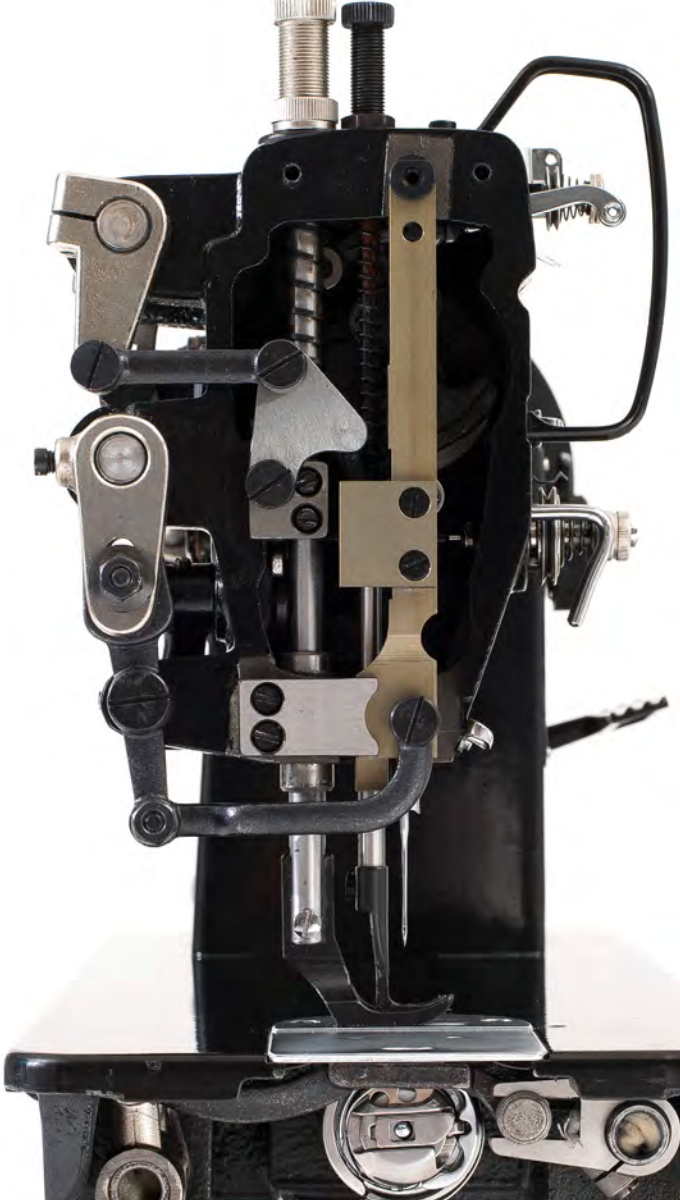

Sailrite.com

Equipping you to sew at home & on the water.

Fabricator Patented Technology: #7438009

120652*1

Sailrite Fabricator Guidebook

V-1